CAT93C76

EEPROM Serial 8-Kb Microwire

ON Semiconductor®

www.onsemi.com

SOIC−8
V, W SUFFIX
CASE 751BD

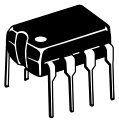

PDIP−8
L SUFFIX
CASE 646AA

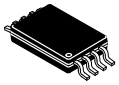

TSSOP−8
Y SUFFIX
CASE 948AL

Description

The CAT93C76 is an 8−Kb Microwire Serial EEPROM memory device which is configured as either registers of 16 bits (ORG pin at V_{CC} or Not Connected) or 8 bits (ORG pin at GND). Each register can be written (or read) serially by using the DI (or DO) pin. The CAT93C76 is manufactured using ON Semiconductor's advanced CMOS EEPROM floating gate technology. The device is designed to endure 1,000,000 program/erase cycles and has a data retention of 100 years. The device is available in 8−pin PDIP, SOIC and TSSOP packages.

Features

- High Speed Operation: 3 MHz @ $V_{CC} \geq 2.5$ V
- Low Power CMOS Technology
- 1.8 to 5.5 Volt Operation
- Selectable x8 or x16 Memory Organization
- Self−timed Write Cycle with Auto−clear
- Software Write Protection
- Power−up Inadvertant Write Protection
- 1,000,000 Program/Erase Cycles
- 100 Year Data Retention
- Industrial and Extended Temperature Ranges
- Sequential Read
- "Green" Package Option Available
- This Device is Pb−Free, Halogen Free/BFR Free and RoHS Compliant

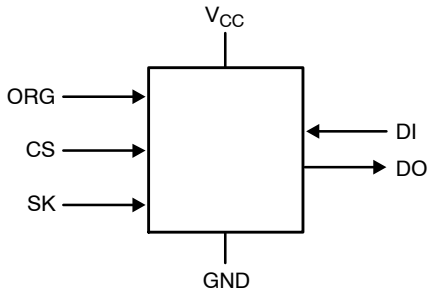

Figure 1. Functional Symbol

NOTE: When the ORG pin is connected to V_{CC}, the x16 organization is selected. When it is connected to ground, the x8 organization is selected. If the ORG pin is left unconnected, then an internal pull−up device will select the x16 organization.

PIN CONFIGURATION

PDIP (L), SOIC (V, W), TSSOP (Y)

PIN FUNCTION

Pin Name	Function
CS	Chip Select
SK	Serial Clock Input
DI	Serial Data Input
DO	Serial Data Output
V_{CC}	Power Supply
GND	Ground
ORG	Memory Organization
NC	No Connection

ORDERING INFORMATION

See detailed ordering and shipping information in the package dimensions section on page 8 of this data sheet.

© Semiconductor Components Industries, LLC, 2013

Table 1. ABSOLUTE MAXIMUM RATINGS

Parameters	Ratings	Units
Temperature Under Bias	−55 to +125	°C
Storage Temperature	−65 to +150	°C
Voltage on any Pin with Respect to Ground (Note 1)	−2.0 to +V_{CC} +2.0	V
V_{CC} with Respect to Ground	−2.0 to +7.0	V
Lead Soldering Temperature (10 seconds)	300	°C
Output Short Circuit Current (Note 2)	100	mA

Stresses exceeding those listed in the Maximum Ratings table may damage the device. If any of these limits are exceeded, device functionality should not be assumed, damage may occur and reliability may be affected.

1. The minimum DC input voltage is −0.5 V. During transitions, inputs may undershoot to −2.0 V for periods of less than 20 ns. Maximum DC voltage on output pins is V_{CC} +0.5 V, which may overshoot to V_{CC} +2.0 V for periods of less than 20 ns.
2. Output shorted for no more than one second.

Table 2. RELIABILITY CHARACTERISTICS (Note 2)

Symbol	Parameter	Reference Test Method	Min	Units
N_{END} (Note 3)	Endurance	MIL−STD−883, Test Method 1033	1,000,000	Cycles / Byte
T_{DR} (Note 3)	Data Retention	MIL−STD−883, Test Method 1008	100	Years
V_{ZAP} (Note 3)	ESD Susceptibility	MIL−STD−883, Test Method 3015	2,000	V
I_{LTH} (Notes 3, 4)	Latch−Up	JEDEC Standard 17	100	mA

3. These parameters are tested initially and after a design or process change that affects the parameter.
4. Latch−up protection is provided for stresses up to 100 mA on I/O pins from −1 V to V_{CC} + 1 V.

Table 3. D.C. OPERATING CHARACTERISTICS (V_{CC} = +1.8 V to +5.5 V unless otherwise specified.)

Symbol	Parameter	Test Conditions	Min	Typ	Max	Units
I_{CC1}	Power Supply Current (Write)	f_{SK} = 1 MHz, V_{CC} = 5.0 V		1	3	mA
I_{CC2}	Power Supply Current (Read)	f_{SK} = 1 MHz, V_{CC} = 5.0 V		300	500	μA
I_{SB1}	Power Supply Current (Standby) (x8 Mode)	CS = 0 V, ORG = GND		2	10	μA
I_{SB2}	Power Supply Current (Standby) (x16 Mode)	CS = 0 V, ORG = Float or V_{CC}		0 (Note 5)	10	μA
I_{LI}	Input Leakage Current	V_{IN} = 0 V to V_{CC}		0 (Note 5)	10	μA
I_{LO}	Output Leakage Current	V_{OUT} = 0 V to V_{CC}, CS = 0 V		0 (Note 5)	10	μA
I_{LORG}	ORG Pin Leakage Current	ORG = GND or ORG = V_{CC}		1	10	μA
V_{IL1}	Input Low Voltage	4.5 V ≤ V_{CC} ≤ 5.5 V	−0.1		0.8	V
V_{IH1}	Input High Voltage	4.5 V ≤ V_{CC} ≤ 5.5 V	2		V_{CC} + 1	V
V_{IL2}	Input Low Voltage	1.8 V ≤ V_{CC} < 4.5 V	0		V_{CC} x 0.2	V
V_{IH2}	Input High Voltage	1.8 V ≤ V_{CC} < 4.5 V	V_{CC} x 0.7		V_{CC} + 1	V
V_{OL1}	Output Low Voltage	4.5 V ≤ V_{CC} ≤ 5.5 V, I_{OL} = 2.1 mA			0.4	V
V_{OH1}	Output High Voltage	4.5 V ≤ V_{CC} ≤ 5.5 V, I_{OH} = −400 μA	2.4			V
V_{OL2}	Output Low Voltage	1.8 V ≤ V_{CC} < 4.5 V, I_{OL} = 100 μA			0.1	V
V_{OH2}	Output High Voltage	1.8 V ≤ V_{CC} < 4.5 V, I_{OH} = −100 μA	V_{CC} − 0.2			V

5. 0 μA is defined as less than 900 nA.

Table 4. PIN CAPACITANCE (Note 3)

Symbol	Test	Conditions	Min	Typ	Max	Units
C_{OUT}	Output Capacitance (DO)	V_{OUT} = 0 V			5	pF
C_{IN}	Input Capacitance (CS, SK, DI, ORG)	V_{IN} = 0 V			5	pF

Table 5. INSTRUCTION SET (Note 6)

Instruction	Start Bit	Opcode	Address		Data		Comments
			x8	x16	x8	x16	
READ	1	10	A10–A0	A9–A0			Read Address AN– A0
ERASE	1	11	A10–A0	A9–A0			Clear Address AN– A0
WRITE	1	01	A10–A0	A9–A0	D7–D0	D15–D0	Write Address AN– A0
EWEN	1	00	11XXXXXXXXX	11XXXXXXXX			Write Enable
EWDS	1	00	00XXXXXXXXX	00XXXXXXXX			Write Disable
ERAL	1	00	10XXXXXXXXX	10XXXXXXXX			Clear All Addresses
WRAL	1	00	01XXXXXXXXX	01XXXXXXXX	D7–D0	D15–D0	Write All Addresses

6. Address bit A10 for the 1,024x8 org. and A9 for the 512x16 org. are “don’t care” bits, but must be kept at either a “1” or “0” for READ, WRITE and ERASE commands.

Table 6. A.C. CHARACTERISTICS

Symbol	Parameter	Test Conditions	Limits				Units
			V_{CC} = 1.8 V – 2.5 V		V_{CC} = 2.5 V – 5.5 V		
			Min	Max	Min	Max	
t_{CSS}	CS Setup Time		100		50		ns
t_{CSH}	CS Hold Time		0		0		ns
t_{DIS}	DI Setup Time		100		50		ns
t_{DIH}	DI Hold Time		100		50		ns
t_{PD1}	Output Delay to 1			250		150	ns
t_{PD0}	Output Delay to 0	C_L = 100 pF (Note 7)		250		150	ns
t_{HZ} (Note 8)	Output Delay to High–Z			150		100	ns
t_{EW}	Program/Erase Pulse Width			5		5	ms
t_{CSMIN}	Minimum CS Low Time		200		150		ns
t_{SKHI}	Minimum SK High Time		250		150		ns
t_{SKLOW}	Minimum SK Low Time		250		150		ns
t_{SV}	Output Delay to Status Valid			250		100	ns
SK_{MAX}	Maximum Clock Frequency		DC	1000	DC	3000	kHz

7. The input levels and timing reference points are shown in the “AC Test Conditions” table.
8. These parameters are tested initially and after a design or process change that affects the parameter.

Table 7. POWER–UP TIMING (Notes 8, 9)

Symbol	Parameter	Max	Units
t_{PUR}	Power–up to Read Operation	1	ms
t_{PUW}	Power–up to Write Operation	1	ms

9. t_{PUR} and t_{PUW} are the delays required from the time V_{CC} is stable until the specified operation can be initiated.

Table 8. A.C. TEST CONDITIONS

Input Rise and Fall Times	≤ 50 ns	
Input Pulse Voltages	0.4 V to 2.4 V	4.5 V ≤ V_{CC} ≤ 5.5 V
Timing Reference Voltages	0.8 V, 2.0 V	4.5 V ≤ V_{CC} ≤ 5.5 V
Input Pulse Voltages	0.2 V_{CC} to 0.7 V_{CC}	1.8 V ≤ V_{CC} ≤ 4.5 V
Timing Reference Voltages	0.5 V_{CC}	1.8 V ≤ V_{CC} ≤ 4.5 V

Device Operation

The CAT93C76 is a 8192−bit nonvolatile memory intended for use with industry standard microprocessors. The CAT93C76 can be organized as either registers of 16 bits or 8 bits. When organized as X16, seven 13−bit instructions control the read, write and erase operations of the device. When organized as X8, seven 14−bit instructions control the read, write and erase operations of the device. The CAT93C76 operates on a single power supply and will generate on chip, the high voltage required during any write operation.

Instructions, addresses, and write data are clocked into the DI pin on the rising edge of the clock (SK). The DO pin is normally in a high impedance state except when reading data from the device, or when checking the ready/busy status after a write operation.

The ready/busy status can be determined after the start of a write operation by selecting the device (CS high) and polling the DO pin; DO low indicates that the write operation is not completed, while DO high indicates that the device is ready for the next instruction. If necessary, the DO pin may be placed back into a high impedance state during chip select by shifting a dummy “1” into the DI pin. The DO pin will enter the high impedance state on the falling edge of the clock (SK). Placing the DO pin into the high impedance state is recommended in applications where the DI pin and the DO pin are to be tied together to form a common DI/O pin.

The format for all instructions sent to the device is a logical “1” start bit, a 2−bit (or 4−bit) opcode, 10−bit address (an additional bit when organized X8) and for write operations a 16−bit data field (8−bit for X8 organizations). The most significant bit of the address is “don’t care” but it must be present.

Read

Upon receiving a READ command and an address (clocked into the DI pin), the DO pin of the CAT93C76 will come out of the high impedance state and, after sending an initial dummy zero bit, will begin shifting out the data addressed (MSB first). The output data bits will toggle on the rising edge of the SK clock and are stable after the specified time delay (t_{PD0} or t_{PD1}).

For the CAT93C76, after the initial data word has been shifted out and CS remains asserted with the SK clock continuing to toggle, the device will automatically increment to the next address and shift out the next data word in a sequential READ mode. As long as CS is continuously asserted and SK continues to toggle, the device will keep incrementing to the next address automatically until it reaches the end of the address space, then loops back to address 0. In the sequential READ mode, only the initial data word is preceeded by a dummy zero bit. All subsequent data words will follow without a dummy zero bit.

Write

After receiving a WRITE command, address and the data, the CS (Chip Select) pin must be deselected for a minimum of t_{CSMIN}. The falling edge of CS will start the self clocking clear and data store cycle of the memory location specified in the instruction. The clocking of the SK pin is not necessary after the device has entered the self clocking mode. The ready/busy status of the CAT93C76 can be determined by selecting the device and polling the DO pin. Since this device features Auto−Clear before write, it is NOT necessary to erase a memory location before it is written into.

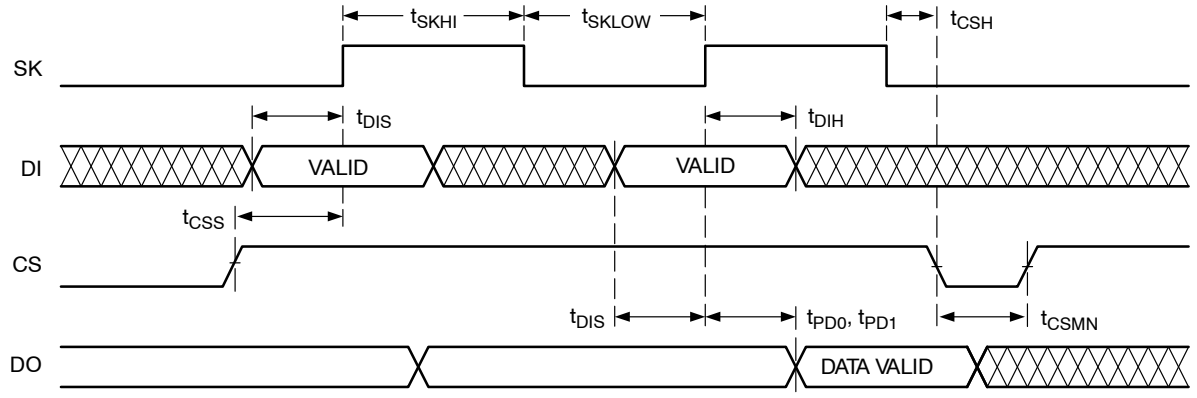

Figure 2. Synchronous Data Timing

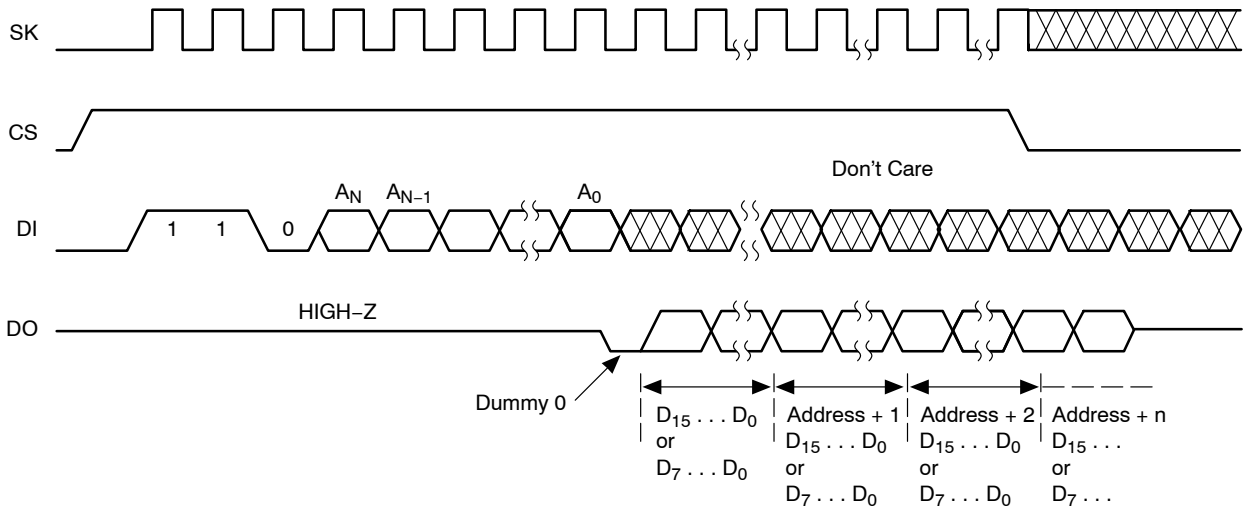

Figure 3. READ Instruction Timing

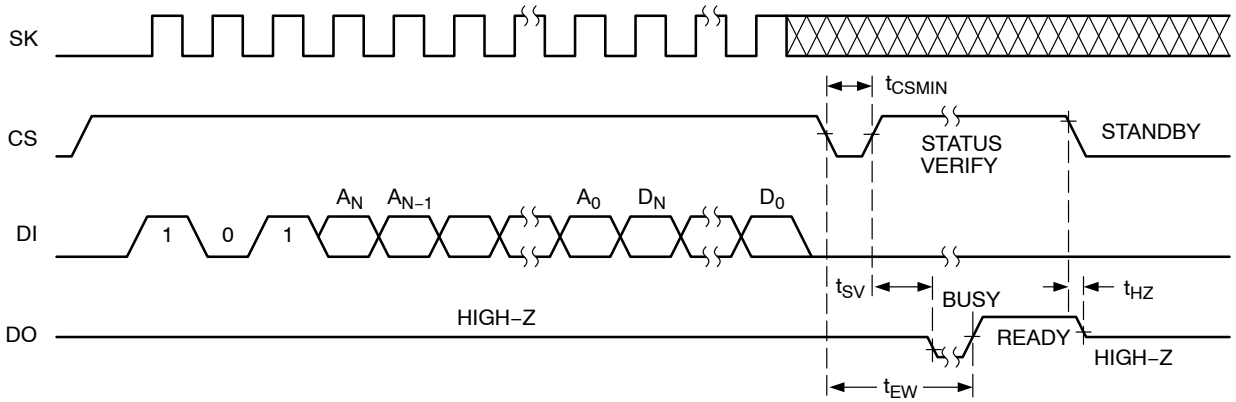

Figure 4. WRITE Instruction Timing

Erase

Upon receiving an ERASE command and address, the CS (Chip Select) pin must be deasserted for a minimum of t_{CSMIN}. The falling edge of CS will start the self clocking clear cycle of the selected memory location. The clocking of the SK pin is not necessary after the device has entered the self clocking mode. The ready/busy status of the CAT93C76 can be determined by selecting the device and polling the DO pin. Once cleared, the content of a cleared location returns to a logical “1” state.

Erase/Write Enable and Disable

The CAT93C76 powers up in the write disable state. Any writing after power−up or after an EWDS (write disable) instruction must first be preceded by the EWEN (write enable) instruction. Once the write instruction is enabled, it will remain enabled until power to the device is removed, or the EWDS instruction is sent. The EWDS instruction can be used to disable all CAT93C76 write and clear instructions, and will prevent any accidental writing or clearing of the device. Data can be read normally from the device regardless of the write enable/disable status.

Erase All

Upon receiving an ERAL command, the CS (Chip Select) pin must be deselected for a minimum of t_{CSMIN}. The falling edge of CS will start the self clocking clear cycle of all memory locations in the device. The clocking of the SK pin is not necessary after the device has entered the self clocking mode. The ready/busy status of the CAT93C76 can be determined by selecting the device and polling the DO pin. Once cleared, the contents of all memory bits return to a logical “1” state.

Write All

Upon receiving a WRAL command and data, the CS (Chip Select) pin must be deselected for a minimum of t_{CSMIN}. The falling edge of CS will start the self clocking data write to all memory locations in the device. The clocking of the SK pin is not necessary after the device has entered the self clocking mode. The ready/busy status of the CAT93C76 can be determined by selecting the device and polling the DO pin. It is not necessary for all memory locations to be cleared before the WRAL command is executed.

Note 1: *After the last data bit has been sampled, Chip Select (CS) must be brought Low before the next rising edge of the clock (SK) in order to start the self−timed high voltage cycle. This is important because if CS is brought low before or after this specific frame window, the addressed location will not be programmed or erased.*

Power−On Reset (POR)

The CAT93C76 incorporates Power−On Reset (POR) circuitry which protects the device against malfunctioning while V_{CC} is lower than the recommended operating voltage.

The device will power up into a read−only state and will power−down into a reset state when V_{CC} crosses the POR level of ~1.3 V.

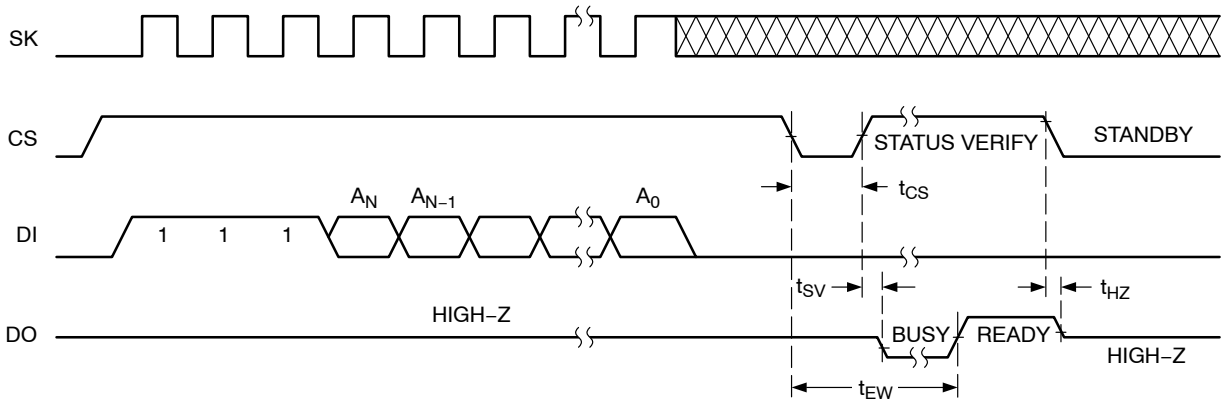

Figure 5. ERASE Instruction Timing

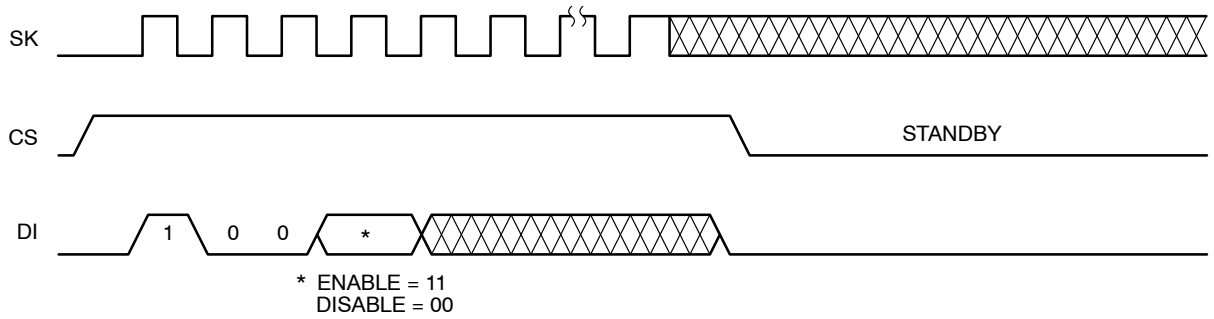

Figure 6. EWEN/EWDS Instruction Timing

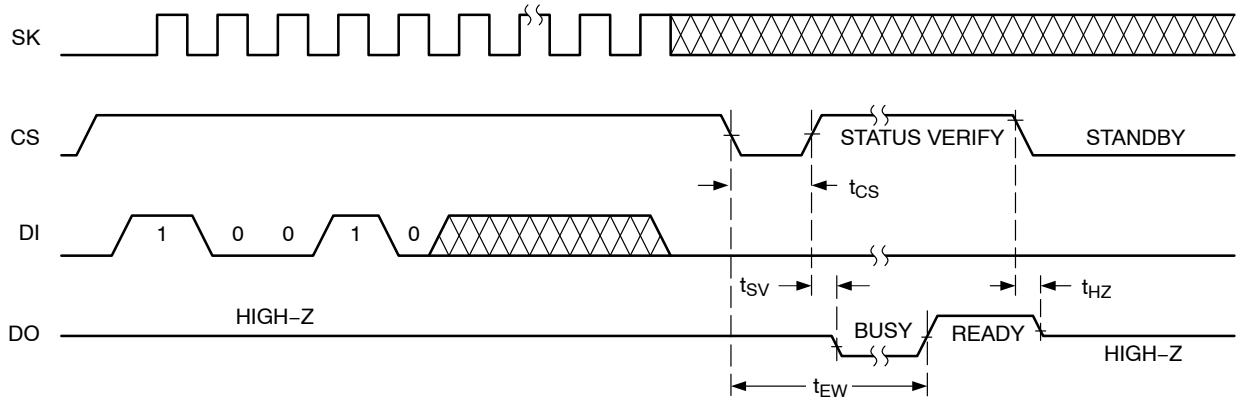

Figure 7. ERAL Instruction Timing

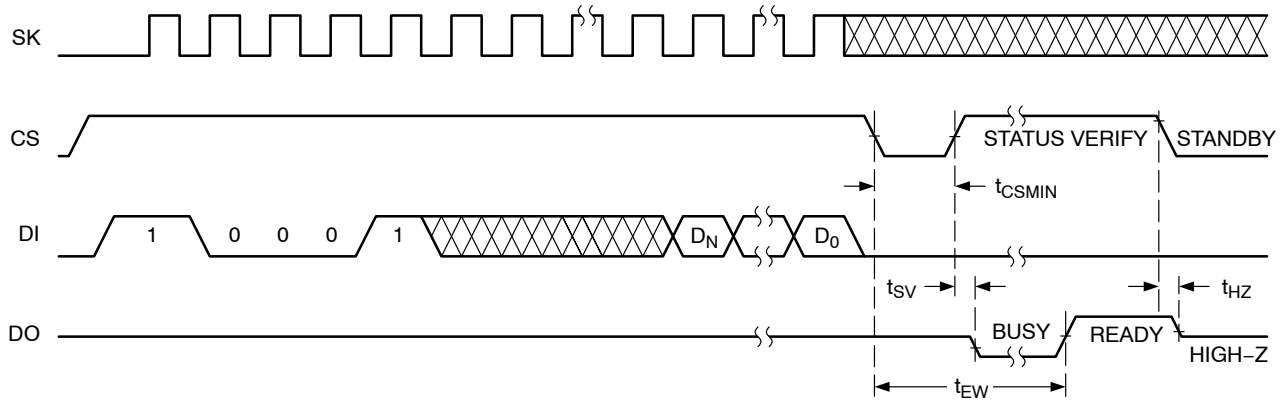

Figure 8. WRAL Instruction Timing

Ordering Information

OPN	Specific Device Marking	Pkg Type	Temperature Range	Lead Finish	Shipping
CAT93C76LI−G	93C76L	PDIP−8	I = Industrial (−40°C to +85°C)	NiPdAu	Tube, 50 Units / Tube
CAT93C76VE−G	93C76V	SOIC−8, JEDEC	E = Extended (−40°C to +125°C)	NiPdAu	Tube, 100 Units / Tube
CAT93C76VE−GT3	93C76V	SOIC−8, JEDEC	E = Extended (−40°C to +125°C)	NiPdAu	Tape & Reel, 3000 Units / Reel
CAT93C76VI−G	93C76V	SOIC−8, JEDEC	I = Industrial (−40°C to +85°C)	NiPdAu	Tube, 100 Units / Tube
CAT93C76VI−GT3	93C76V	SOIC−8, JEDEC	I = Industrial (−40°C to +85°C)	NiPdAu	Tape & Reel, 3000 Units / Reel
CAT93C76YI−GT3	M76	TSSOP−8	I = Industrial (−40°C to +85°C)	NiPdAu	Tape & Reel, 3000 Units / Reel

10. All packages are RoHS−compliant (Lead−free, Halogen−free).
11. The standard lead finish is NiPdAu.
12. For information on tape and reel specifications, including part orientation and tape sizes, please refer to our Tape and Reel Packaging Specifications Brochure, BRD8011/D.
13. For additional package and temperature options, please contact your nearest ON Semiconductor sales office.

onsemi, onsemi, and other names, marks, and brands are registered and/or common law trademarks of Semiconductor Components Industries, LLC dba "**onsemi**" or its affiliates and/or subsidiaries in the United States and/or other countries. **onsemi** owns the rights to a number of patents, trademarks, copyrights, trade secrets, and other intellectual property. A listing of **onsemi**'s product/patent coverage may be accessed at www.onsemi.com/site/pdf/Patent−Marking.pdf. **onsemi** reserves the right to make changes at any time to any products or information herein, without notice. The information herein is provided "as−is" and **onsemi** makes no warranty, representation or guarantee regarding the accuracy of the information, product features, availability, functionality, or suitability of its products for any particular purpose, nor does **onsemi** assume any liability arising out of the application or use of any product or circuit, and specifically disclaims any and all liability, including without limitation special, consequential or incidental damages. Buyer is responsible for its products and applications using **onsemi** products, including compliance with all laws, regulations and safety requirements or standards, regardless of any support or applications information provided by **onsemi**. "Typical" parameters which may be provided in **onsemi** data sheets and/or specifications can and do vary in different applications and actual performance may vary over time. All operating parameters, including "Typicals" must be validated for each customer application by customer's technical experts. **onsemi** does not convey any license under any of its intellectual property rights nor the rights of others. **onsemi** products are not designed, intended, or authorized for use as a critical component in life support systems or any FDA Class 3 medical devices or medical devices with a same or similar classification in a foreign jurisdiction or any devices intended for implantation in the human body. Should Buyer purchase or use **onsemi** products for any such unintended or unauthorized application, Buyer shall indemnify and hold **onsemi** and its officers, employees, subsidiaries, affiliates, and distributors harmless against all claims, costs, damages, and expenses, and reasonable attorney fees arising out of, directly or indirectly, any claim of personal injury or death associated with such unintended or unauthorized use, even if such claim alleges that **onsemi** was negligent regarding the design or manufacture of the part. **onsemi** is an Equal Opportunity/Affirmative Action Employer. This literature is subject to all applicable copyright laws and is not for resale in any manner.

ADDITIONAL INFORMATION

TECHNICAL PUBLICATIONS:
Technical Library: www.onsemi.com/design/resources/technical−documentation
onsemi Website: www.onsemi.com

ONLINE SUPPORT: www.onsemi.com/support
For additional information, please contact your local Sales Representative at
www.onsemi.com/support/sales