600 V / 4 A, High-Side Automotive Gate Driver IC

FAN7171-F085

SOIC8
CASE 751EB

Description

The FAN7171-F085 is a monolithic high−side gate drive IC that can drive high−speed MOSFETs and IGBTs that operate up to +600 V. It has a buffered output stage with all NMOS transistors designed for high pulse current driving capability and minimum cross−conduction.

onsemi's high−voltage process and common−mode noise-canceling techniques provide stable operation of the high−side driver under high-dv/dt noise circumstances. An advanced level−shift circuit offers high−side gate driver operation up to V_S = −9.8 V (typical) for V_{BS} = 15 V.

The UVLO circuit prevents malfunction when V_{BS} is lower than the specified threshold voltage.

The high−current and low−output voltage-drop feature make this device suitable for sustaining switch drivers and energy−recovery switch drivers in automotive motor drive inverters, switching power supplies, and high−power DC−DC converter applications.

Features

- Floating Channel for Bootstrap Operation to +600 V
- 4 A Sourcing and 4 A Sinking Current Driving Capability
- Common−Mode dv/dt Noise−Cancelling Circuit
- 3.3 V and 5 V Input Logic Compatible
- Output In−phase with Input Signal
- Under− Voltage Lockout for V_{BS}
- 25 V Shunt Regulator on V_{DD} and V_{BS}
- 8−SOIC Package, Case 751EB (JEDEC MS−012, 0.150 inch Narrow Body)
- Automotive Qualified to AEC Q100 for Ambient Operating Temperature from −40°C to 125°C

Applications

- Common Rail Injection Systems
- DC−DC Converter
- Motor Drive (Electric Power Steering, Fans)

Related Product Resources

- FAN7171−F085 Product Folder
- AN−6076 Design and Application Guide of Bootstrap Circuit for High−Voltage Gate−Drive IC
- AN−8102 200 Recommendations to Avoid Short Pulse Width Issues in HVIC Gate Driver Applications
- AN−9052 Design Guide for Selection of Bootstrap Components
- AN−4171 FAN7085 High−Side Gate Driver− Internal Recharge Path Design Considerations

ORDERING INFORMATION

Device	Package	Shipping†
FAN7171M-F085	Case 751EB (Pb−Free / Halogen Free)	Tube
FAN7171MX−F085		Tape & Reel
FAN7171MX−F085−1		Tape & Reel

†For information on tape and reel specifications, including part orientation and tape sizes, please refer to our Tape and Reel Packaging Specification Brochure, BRD8011/D.

1. These devices passed wave soldering test by JESD22A−111.
2. A suffix as "…F085P" has been temporarily introduced in order to manage a double source strategy as **onsemi** has officially announced in Aug 2014.

© Semiconductor Components Industries, LLC, 2013

TYPICAL APPLICATION

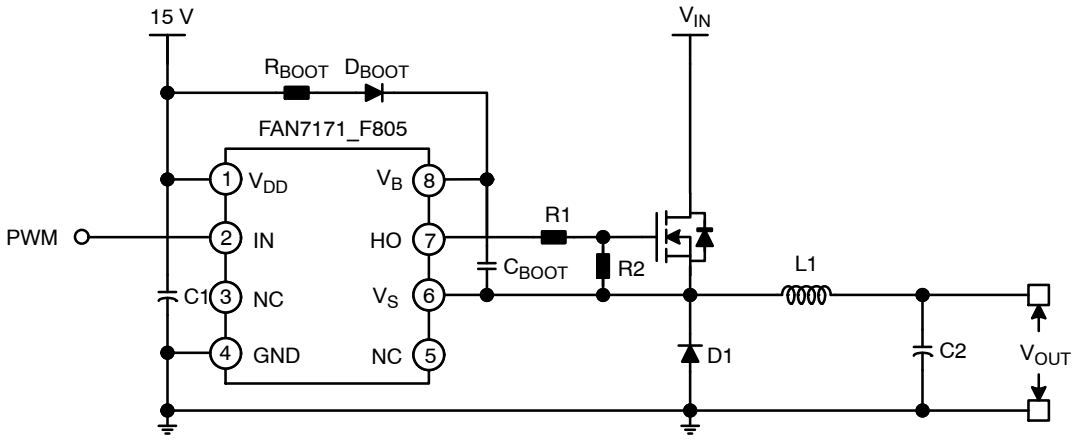

Figure 1. Typical Application

BLOCK DIAGRAM

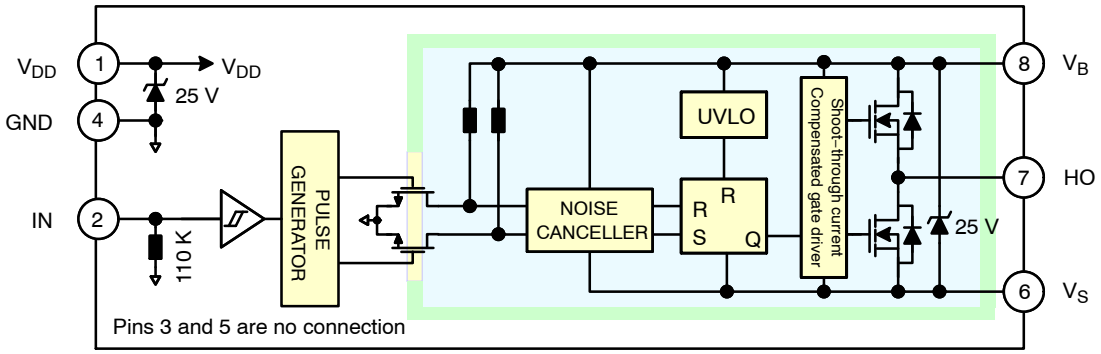

Figure 2. Block Diagram

PIN CONFIGURATION

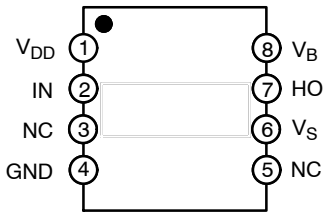

Figure 3. Pin Assignment (Top Through View)

Table 1. PIN DESCRIPTIONS

Pin #	Name	Description
1	V_{DD}	Supply Voltage
2	IN	Logic Input for High−Side Gate Driver Output
3	NC	No Connection
4	GND	Ground
5	NC	No Connection
6	V_S	High−Voltage Floating Supply Return
7	HO	High−Side Driver Output
8	V_B	High−Side Floating Supply

Table 2. ABSOLUTE MAXIMUM RATINGS

Symbol	Characteristics	Min.	Max.	Unit
V_S	High−Side Floating Offset Voltage	V_B−V_{SHUNT}	V_B+0.3	V
V_B	High−Side Floating Supply Voltage (Note 3)	−0.3	625.0	V
V_{HO}	High−Side Floating Output Voltage	V_S−0.3	V_B+0.3	V
V_{DD}	Low−Side and Logic Supply Voltage (Note 3)	−0.3	V_{SHUNT}	V
V_{IN}	Logic Input Voltage	−0.3	V_{DD}+0.3	V
dV_S/dt	Allowable Offset Voltage Slew Rate		±50	V/ns
P_D	Power Dissipation (Notes 4, 5, 6)		0.625	W
θ_{JA}	Thermal Resistance		200	°C/W
T_J	Junction Temperature	−55	150	°C
T_{STG}	Storage Temperature	−55	150	°C
T_A	Operating Ambient Temperature	−40	125	°C
ESD	Human Body Model (HBM)		2000	V
	Charge Device Model (CDM)		500	

Stresses exceeding those listed in the Maximum Ratings table may damage the device. If any of these limits are exceeded, device functionality should not be assumed, damage may occur and reliability may be affected.

3. This IC contains a shunt regulator on V_{DD} and V_{BS} with a normal breakdown voltage of 25 V. Please note that this supply pin should not be driven by a low−impedance voltage source greater than the V_{SHUNT} specified in the Electrical Characteristics section.
4. Mounted on 76.2 x 114.3 x 1.6 mm PCB (FR−4 glass epoxy material).
5. Refer to the following standards:
   JESD51−2: Integral circuits thermal test method environmental conditions, natural convection, and
   JESD51−3: Low effective thermal conductivity test board for leaded surface−mount packages.
6. Do not exceed power dissipation (P_D) under any circumstances.

Table 3. RECOMMENDED OPERATING CONDITIONS

Symbol	Characteristics	Min.	Max.	Unit
V_{BS}	High−Side Floating Supply Voltage	V_S+10	V_S+20	V
V_S	High−Side Floating Supply Offset Voltage (DC)	6−V_{DD}	600	V
	High−Side Floating Supply Offset Voltage (Transient)	−15 (~170)		
		−7 (~400)		
V_{HO}	High−Side Output Voltage	V_S	V_B	V
V_{IN}	Logic Input Voltage	GND	V_{DD}	V
V_{DD}	Supply Voltage	10	20	V
T_{PULSE}	Minimum Input Pulse Width (Note 7)	80	–	ns

Functional operation above the stresses listed in the Recommended Operating Ranges is not implied. Extended exposure to stresses beyond the Recommended Operating Ranges limits may affect device reliability.

7. Input pulses shorter than the minimum recommendation can cause abnormal output. Short input pulses can be turn on pulses (i.e., rising edge to the adjacent falling edge), turn off pulses (i.e., falling edge to the adjacent rising edge) but also parasitic pulses induced by noise. Refer to Figure 24 and Figure 25. Value guaranteed by design.

Table 4. ELECTRICAL CHARACTERISTICS

(V_{BIAS} (V_{DD}, V_{BS}) = 15 V, −40°C ≤ T_A ≤ 125°C, unless otherwise specified. The V_{IN} and I_{IN} parameters are referenced to GND. The V_O and I_O parameters are relative to V_S and are applicable to the respective output HO)

Symbol	Parameter	Conditions	Min.	Typ.	Max.	Unit
POWER SUPPLY SECTION						
I_{QDD}	Quiescent V_{DD} Supply Current	V_{IN} = 0 V or 5 V		25	70	µA
I_{PDD}	Operating V_{DD} Supply Current	f_{IN} = 20 kHz, No Load		35	100	µA
BOOTSTRAPPED SUPPLY SECTION						
V_{BSUV+}	V_{BS} Supply Under−Voltage Positive-Going Threshold Voltage	V_{BS} = Sweep	8.2	9.2	10.2	V
V_{BSUV-}	V_{BS} Supply Under−Voltage Negative−Going Threshold Voltage	V_{BS} = Sweep	7.5	8.5	9.5	V
V_{BSHYS}	V_{BS} Supply UVLO Hysteresis Voltage	V_{BS} = Sweep		0.6		V
I_{LK}	Offset Supply Leakage Current	V_B = V_S = 600 V			50	µA
I_{QBS}	Quiescent V_{BS} Supply Current	V_{IN} = 0 V or 5 V		60	120	µA
I_{PBS}	Operating V_{BS} Supply Current	C_{LOAD} = 1 nF, f_{IN} = 20 kHz, RMS Value		0.73	2.80	mA
SHUNT REGULATOR SECTION						
V_{SHUNT}	V_{DD} and V_{BS} Shunt Regulator Clamping Voltage	I_{SHUNT} = 5 mA	23	25		V
INPUT LOGIC SECTION (IN)						
V_{IH}	Logic “1” Input Voltage		2.5			V
V_{IL}	Logic “0” Input Voltage				0.8	V
I_{IN+}	Logic Input High Bias Current	V_{IN} = 5 V		45	125	µA
I_{IN-}	Logic Input Low Bias Current	V_{IN} = 0 V			2	µA
R_{IN}	Input Pull−down Resistance		40	110		kΩ
GATE DRIVER OUTPUT SECTION (HO)						
V_{OH}	High Level Output Voltage (V_{BIAS} − V_O)	No Load			1.5	V
V_{OL}	Low Level Output Voltage	No Load			35	mV
I_{O+}	Output High, Short−Circuit Pulsed Current (Note 8)	V_{HO} = 0 V, V_{IN} = 5 V, PW ≤ 10 µs	3.0	4.0		A
I_{O-}	Output Low, Short−Circuit Pulsed Current (Note 8)	V_{HO} = 15 V, V_{IN} = 0 V, PW ≤ 10 µs	3.0	4.0		A
V_S	Allowable Negative V_S Pin Voltage for IN Signal Propagation to HO			−9.8	−7.0	V

Product parametric performance is indicated in the Electrical Characteristics for the listed test conditions, unless otherwise noted. Product performance may not be indicated by the Electrical Characteristics if operated under different conditions.

8. These parameters guaranteed by design.

Table 5. DYNAMIC ELECTRICAL CHARACTERISTICS

(V_{BIAS} (V_{DD}, V_{BS}) = 15 V, V_S = GND = 0 V, C_L =1000 pF, and −40°C ≤ T_A ≤ 125°C, unless otherwise specified)

Symbol	Parameter	Conditions	Min.	Typ.	Max.	Unit
t_{ON}	Turn−On Propagation Delay	V_S = 0 V		150	210	ns
t_{OFF}	Turn−Off Propagation Delay	V_S = 0 V		150	210	ns

Table 5. DYNAMIC ELECTRICAL CHARACTERISTICS (continued)
(V_{BIAS} (V_{DD}, V_{BS}) = 15 V, V_S = GND = 0 V, C_L =1000 pF, and −40°C ≤ T_A ≤ 125°C, unless otherwise specified)

Symbol	Parameter	Conditions	Min.	Typ.	Max.	Unit
t_R	Turn−On Rise Time			25	50	ns
t_F	Turn−Off Fall Time			15	45	ns

TYPICAL PERFORMANCE CHARACTERISTICS

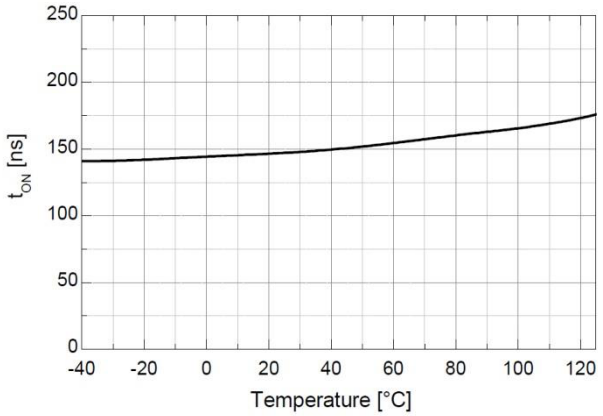

Figure 4. Turn−On Propagation Delay vs. Temperature

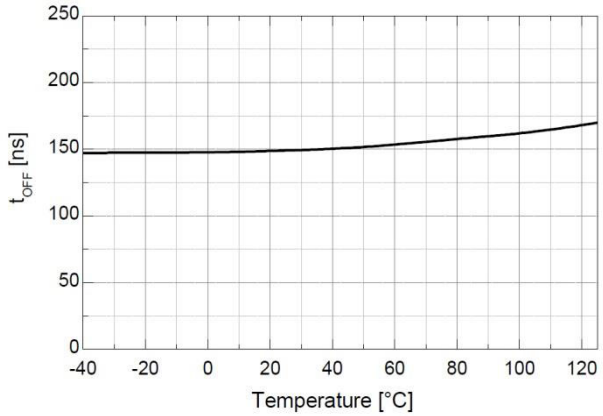

Figure 5. Turn−Off Propagation Delay vs. Temperature

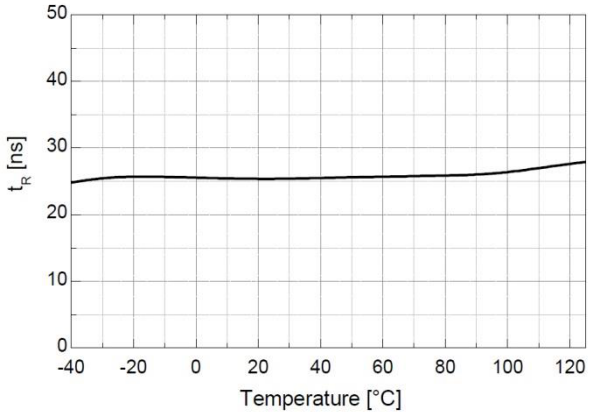

Figure 7. Turn−On Rise Time vs. Temperature

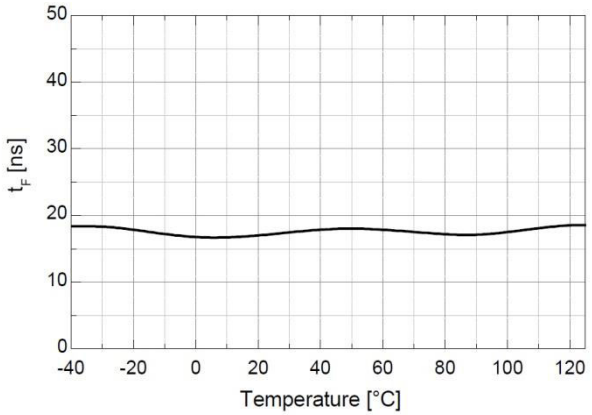

Figure 6. Turn−Off Fall Time vs. Temperature

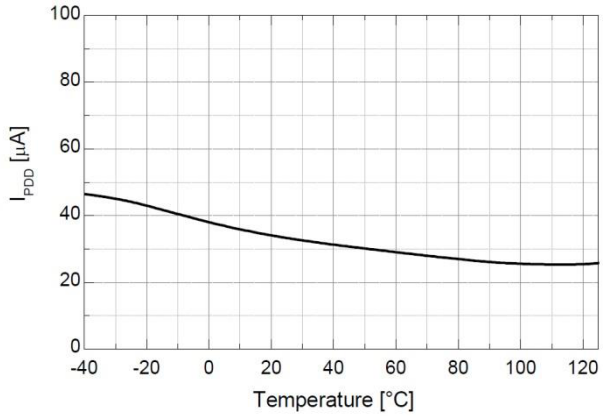

Figure 9. Operating V_{DD} Supply Current vs. Temperature

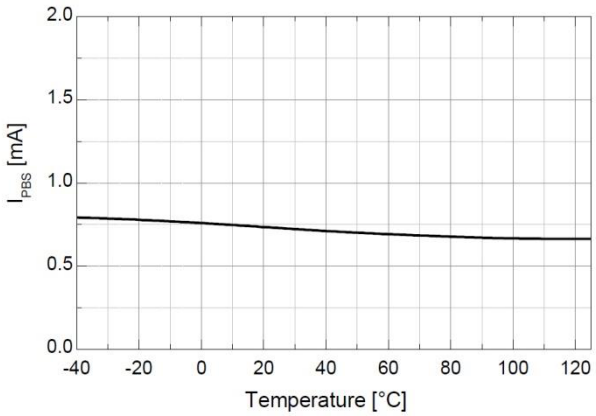

Figure 8. Operating V_{BS} Supply Current vs. Temperature

TYPICAL PERFORMANCE CHARACTERISTICS (continued)

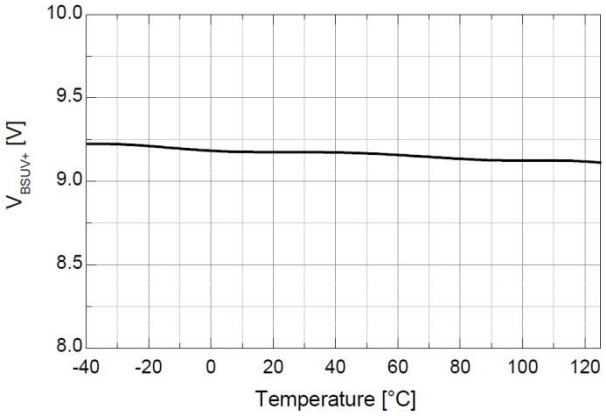

Figure 10. V_{BS} UVLO+ vs. Temperature

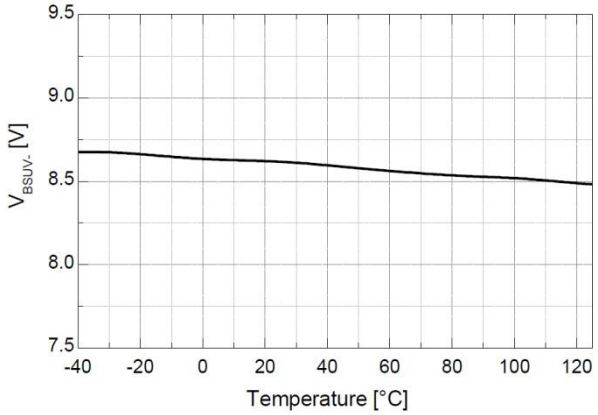

Figure 11. V_{BS} UVLO− vs. Temperature

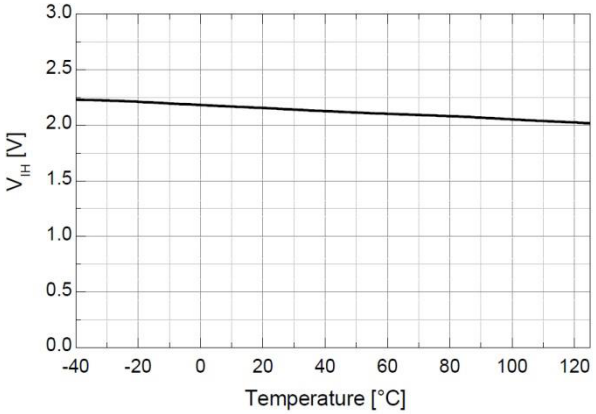

Figure 13. Logic High Input Voltage vs. Temperature

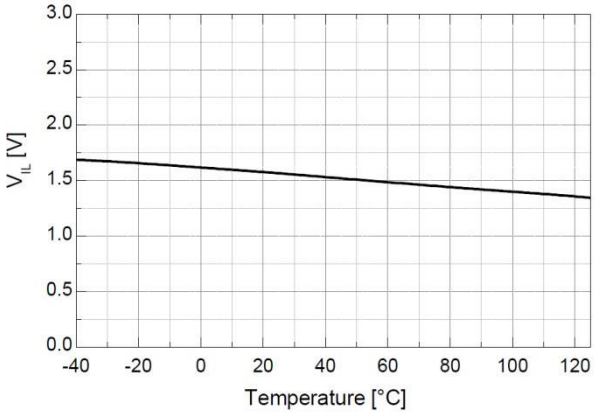

Figure 12. Logic Low Input Voltage vs. Temperature

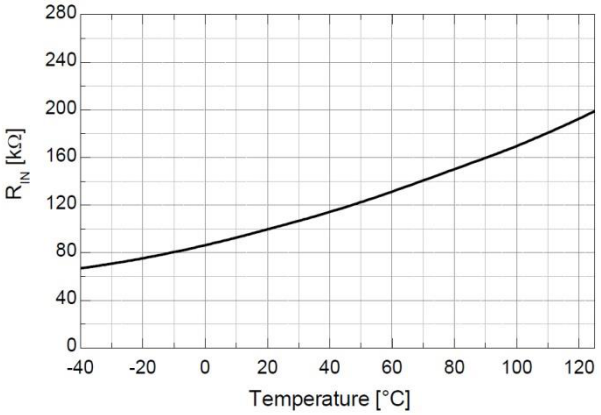

Figure 15. Input Pull−Down Resistance vs. Temperature

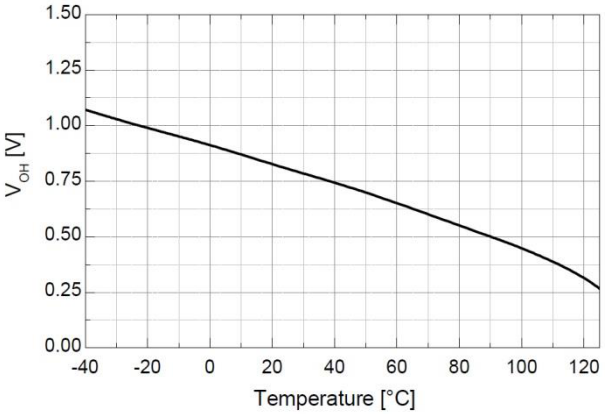

Figure 14. High−Level output Voltage vs. Temperature

TYPICAL PERFORMANCE CHARACTERISTICS (continued)

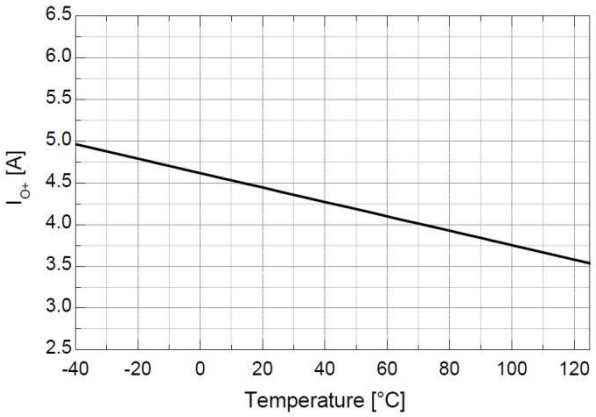

Figure 16. Output High, Short−Circuit Pulsed Current vs. Temperature

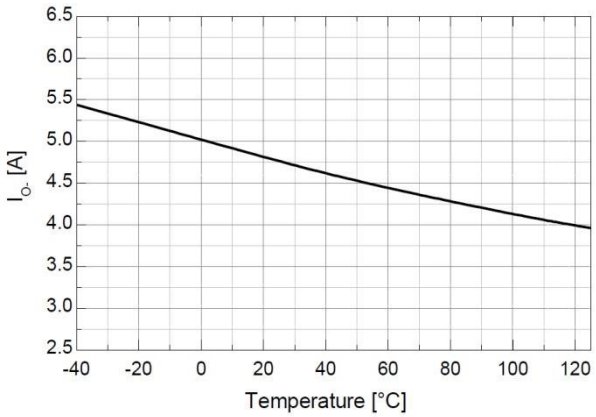

Figure 17. Output Low, Short−Circuit Pulsed Current vs. Temperature

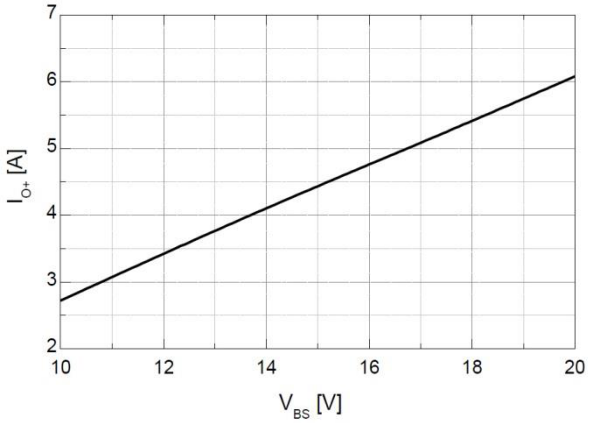

Figure 19. Output High, Short−Circuit Pulsed Current vs. Supply Voltage

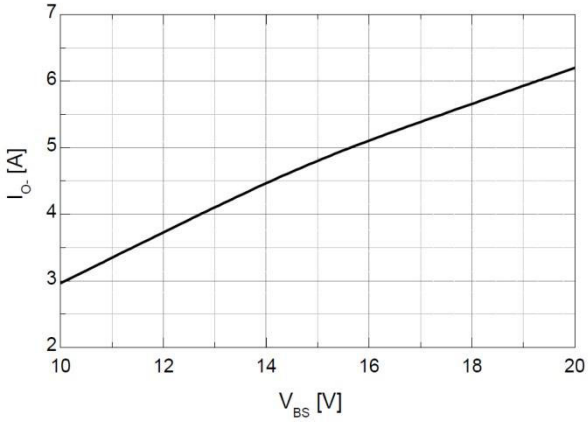

Figure 18. Output Low, Short−Circuit Pulsed Current vs. Supply Voltage

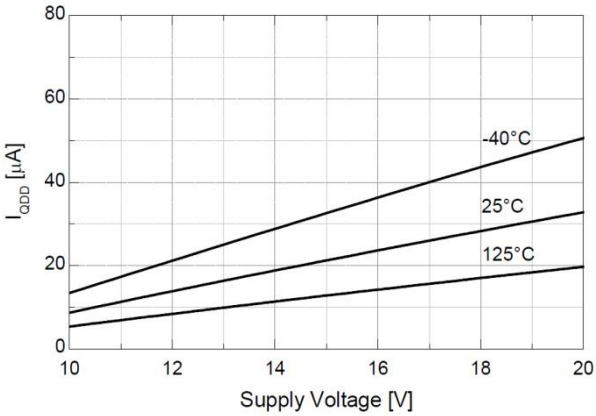

Figure 21. Quiescent V_{DD} Supply Current vs. Supply Voltage

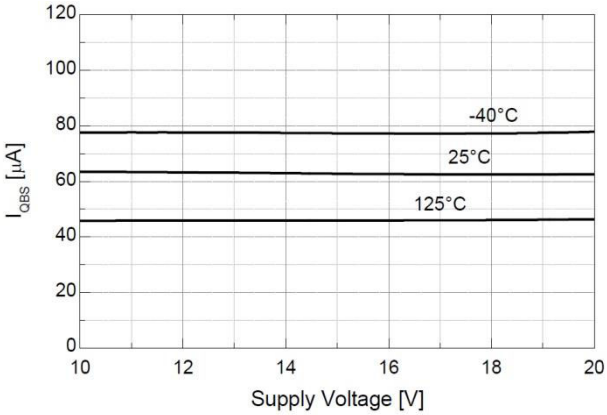

Figure 20. Quiescent V_{BS} Supply Current vs. Supply Voltage

SWITCHING TIME DEFINITIONS

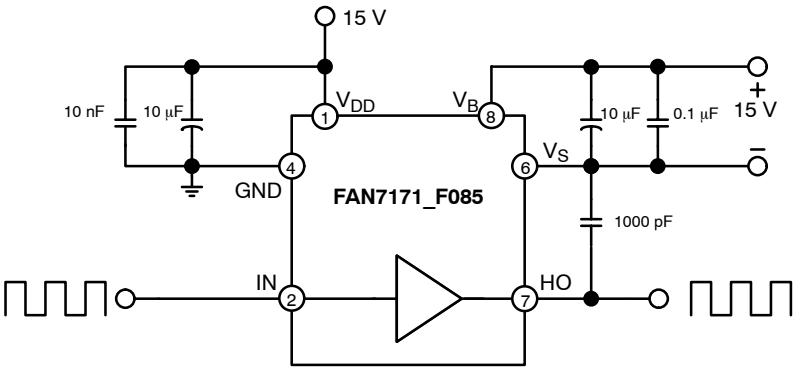

Figure 22. Switching Time Test Circuit (Referenced 8−SOIC)

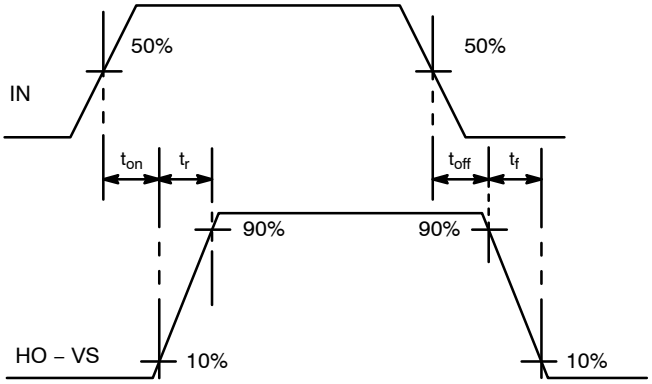

Figure 23. Switching Time Waveform Definitions

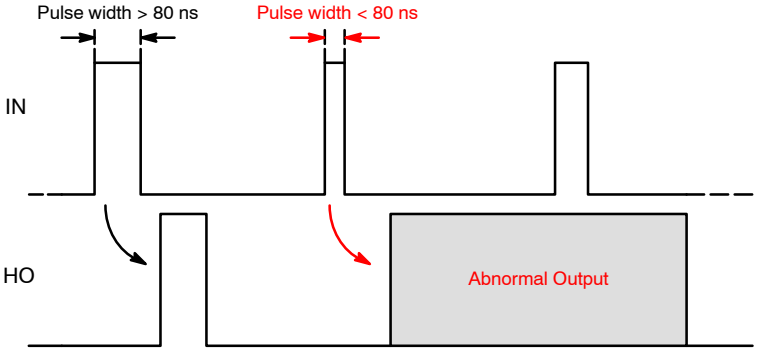

Figure 24. Output Waveform with Short Turn On Input Pulse Width

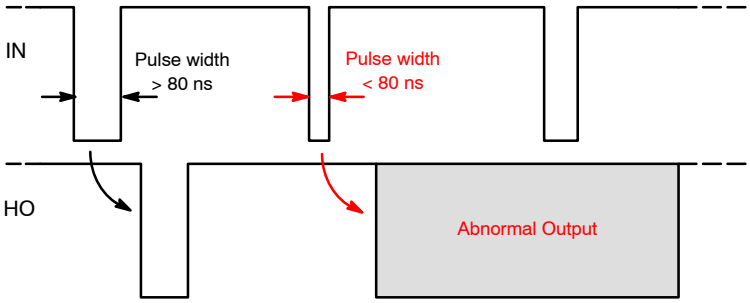

Figure 25. Output Waveform with Short Turn Off Input Pulse Width

SOIC8
CASE 751EB
ISSUE A

DATE 24 AUG 2017

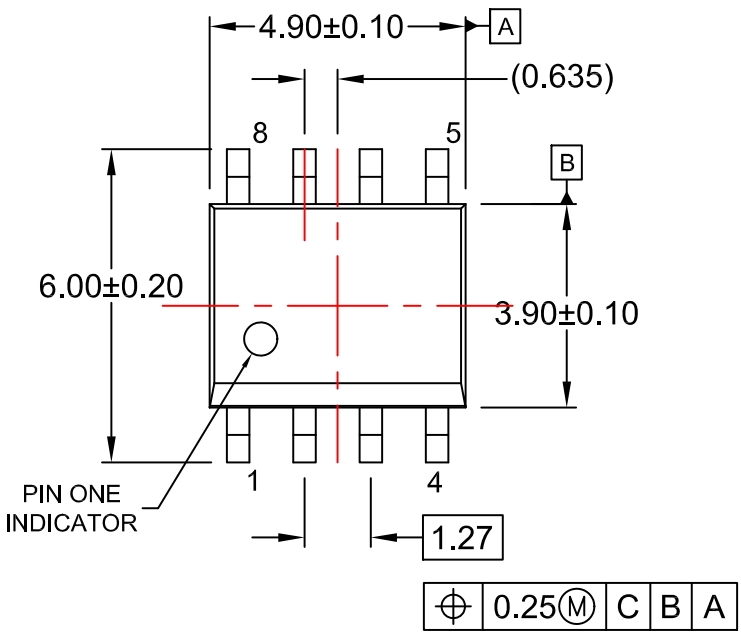

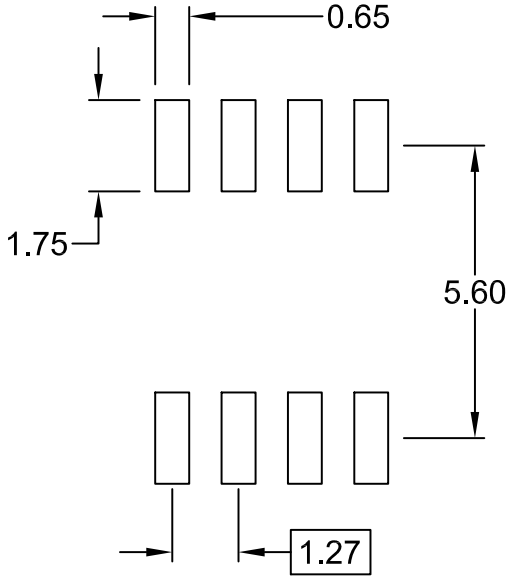

LAND PATTERN RECOMMENDATION

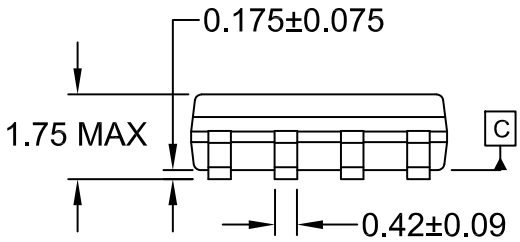

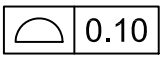

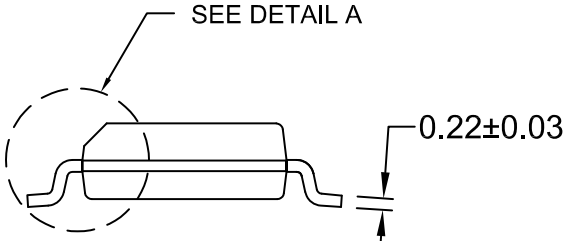

OPTION A - BEVEL EDGE

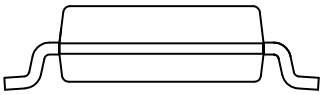

OPTION B - NO BEVEL EDGE

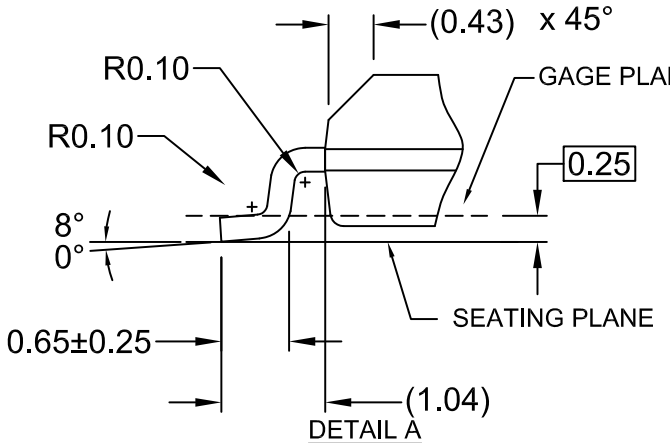

DETAIL A
SCALE: 2:1

NOTES:
A) THIS PACKAGE CONFORMS TO JEDEC MS-012, VARIATION AA.
B) ALL DIMENSIONS ARE IN MILLIMETERS.
C) DIMENSIONS DO NOT INCLUDE MOLD FLASH OR BURRS.
D) LANDPATTERN STANDARD: SOIC127P600X175-8M

DOCUMENT NUMBER:	**98AON13735G**	Electronic versions are uncontrolled except when accessed directly from the Document Repository. Printed versions are uncontrolled except when stamped "CONTROLLED COPY" in red.
DESCRIPTION:	**SOIC8**	**PAGE 1 OF 1**

onsemi and onsemi are trademarks of Semiconductor Components Industries, LLC dba **onsemi** or its subsidiaries in the United States and/or other countries. **onsemi** reserves the right to make changes without further notice to any products herein. **onsemi** makes no warranty, representation or guarantee regarding the suitability of its products for any particular purpose, nor does **onsemi** assume any liability arising out of the application or use of any product or circuit, and specifically disclaims any and all liability, including without limitation special, consequential or incidental damages. **onsemi** does not convey any license under its patent rights nor the rights of others.

onsemi, onsemi, and other names, marks, and brands are registered and/or common law trademarks of Semiconductor Components Industries, LLC dba "**onsemi**" or its affiliates and/or subsidiaries in the United States and/or other countries. **onsemi** owns the rights to a number of patents, trademarks, copyrights, trade secrets, and other intellectual property. A listing of **onsemi**'s product/patent coverage may be accessed at www.onsemi.com/site/pdf/Patent−Marking.pdf. **onsemi** reserves the right to make changes at any time to any products or information herein, without notice. The information herein is provided "as−is" and **onsemi** makes no warranty, representation or guarantee regarding the accuracy of the information, product features, availability, functionality, or suitability of its products for any particular purpose, nor does **onsemi** assume any liability arising out of the application or use of any product or circuit, and specifically disclaims any and all liability, including without limitation special, consequential or incidental damages. Buyer is responsible for its products and applications using **onsemi** products, including compliance with all laws, regulations and safety requirements or standards, regardless of any support or applications information provided by **onsemi**. "Typical" parameters which may be provided in **onsemi** data sheets and/or specifications can and do vary in different applications and actual performance may vary over time. All operating parameters, including "Typicals" must be validated for each customer application by customer's technical experts. **onsemi** does not convey any license under any of its intellectual property rights nor the rights of others. **onsemi** products are not designed, intended, or authorized for use as a critical component in life support systems or any FDA Class 3 medical devices or medical devices with a same or similar classification in a foreign jurisdiction or any devices intended for implantation in the human body. Should Buyer purchase or use **onsemi** products for any such unintended or unauthorized application, Buyer shall indemnify and hold **onsemi** and its officers, employees, subsidiaries, affiliates, and distributors harmless against all claims, costs, damages, and expenses, and reasonable attorney fees arising out of, directly or indirectly, any claim of personal injury or death associated with such unintended or unauthorized use, even if such claim alleges that **onsemi** was negligent regarding the design or manufacture of the part. **onsemi** is an Equal Opportunity/Affirmative Action Employer. This literature is subject to all applicable copyright laws and is not for resale in any manner.

ADDITIONAL INFORMATION

TECHNICAL PUBLICATIONS:
Technical Library: www.onsemi.com/design/resources/technical−documentation
onsemi Website: www.onsemi.com

ONLINE SUPPORT: www.onsemi.com/support
For additional information, please contact your local Sales Representative at
www.onsemi.com/support/sales