高电流、高端与低端、栅极驱动 IC

FAN7390

ON Semiconductor®

www.onsemi.cn

SOIC8
8−SOP
CASE 751EG

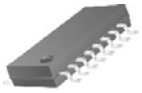

SOIC14
14−SOP
CASE 751ER

MARKING DIAGRAM

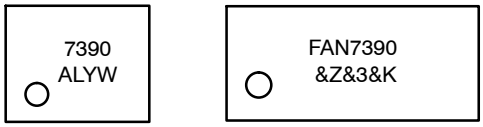

FAN7390MX FAN7390M1X

7390, FAN7390	= Device Code
A	= Assembly Site
L	= Wafer Lot Number
YW	= Assembly Start Week
&Z	= Assembly Plant Code
&3	= 3−Digit Date Code
&K	= 2−Digits Lot Run Traceability Code

ORDERING INFORMATION

See detailed ordering and shipping information on page 12 of this data sheet.

说明

FAN7390 是单片高端和低端栅极驱动 IC，可以驱动工作电压最高达 +600 V 的高速 MOSFET 和 IGBT。它具有缓冲输出级，且所有NMOS 晶体管设计为具有高脉冲电流驱动能力和最低交叉传导。

飞兆半导体的高压工艺和共模噪声消除技术，即使在较高 dv/dt 噪声环境中，也能够保证高端驱动器工作稳定。先进的电平转换电路，使高端栅极驱动器在电源电压为V_{BS} = 15 V 时能够承受高达 V_S = −9.8 V (典型值) 正常工作。

UVLO 电路可防止驱动电路当 V_{DD} 和 V_{BS} 低于指定的阈值电压时发生故障。

其高电流和低输出电压跌落的特点可确保此器件适用于 PDP 维持脉冲驱动，电动机驱动，开关电源以及大功率直流转换器等应用。

特性

- 浮动通道可实现高达 +600 V 的自举运行
- 所有通道的拉电流和灌电流驱动能力为 4.5 A/4.5 A
- 共模dv/dt 噪声消除电路
- 两个通道均内置欠压闭锁功能
- 适用于两个通道的匹配传播延迟
- 逻辑地 (V_{SS}) 和功率 (COM) 接地 ±7 V 偏压
- 兼容 3.3 V 和 5 V 输入逻辑
- 输出与输入同相
- This is a Pb−Free Device

应用

- PDP 维持驱动
- HID 灯镇流器
- SMPS
- 电动机驱动

© Semiconductor Components Industries, LLC, 2008

May, 2021 − Rev. 2

Publication Order Number:
FAN7390CN/D

典型应用电路

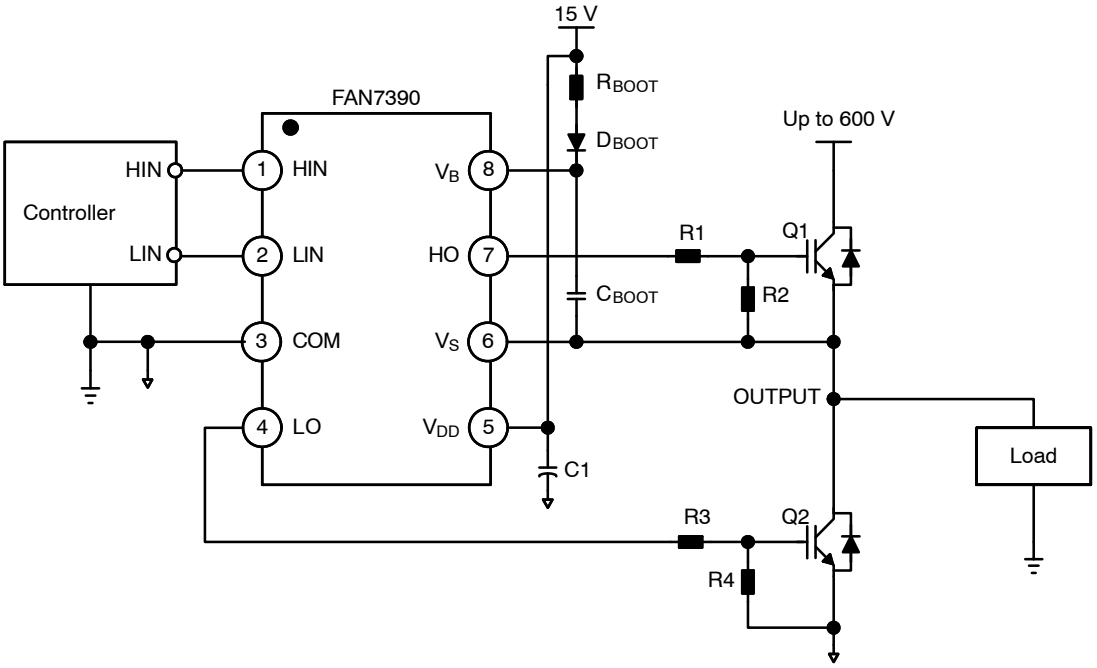

图 1. 半桥应用参考电路 (参考8−SOP)

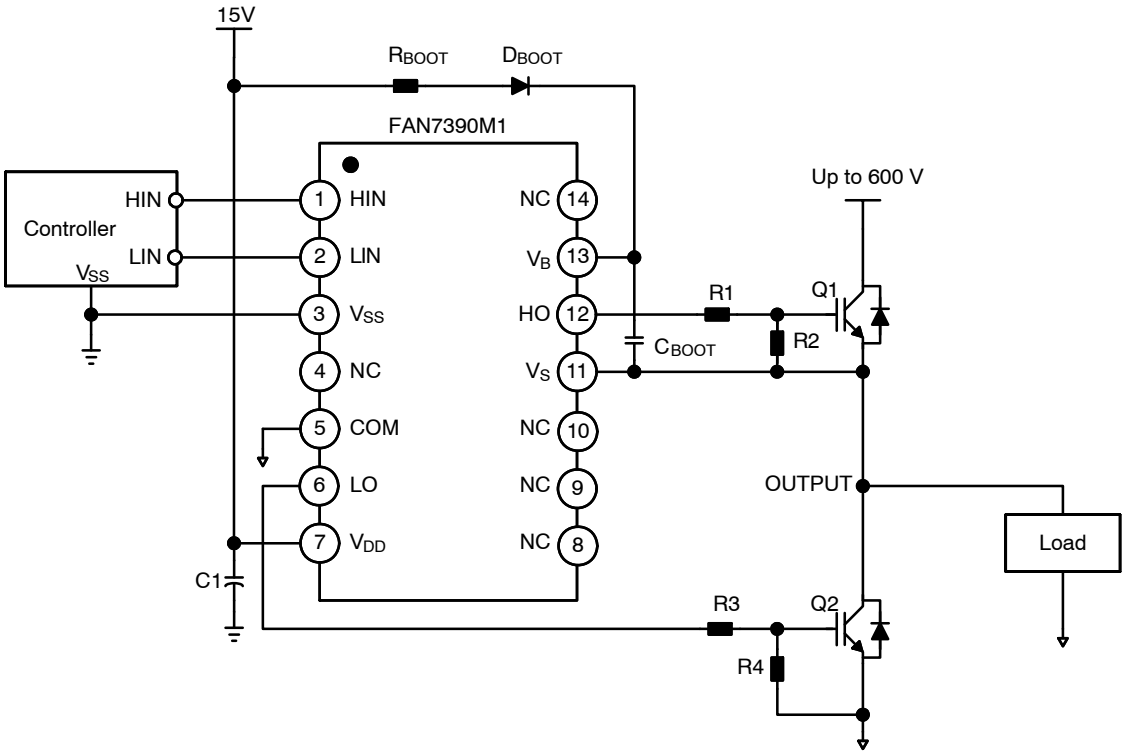

图 2. 半桥应用参考电路 (参考14−SOP)

内部框图

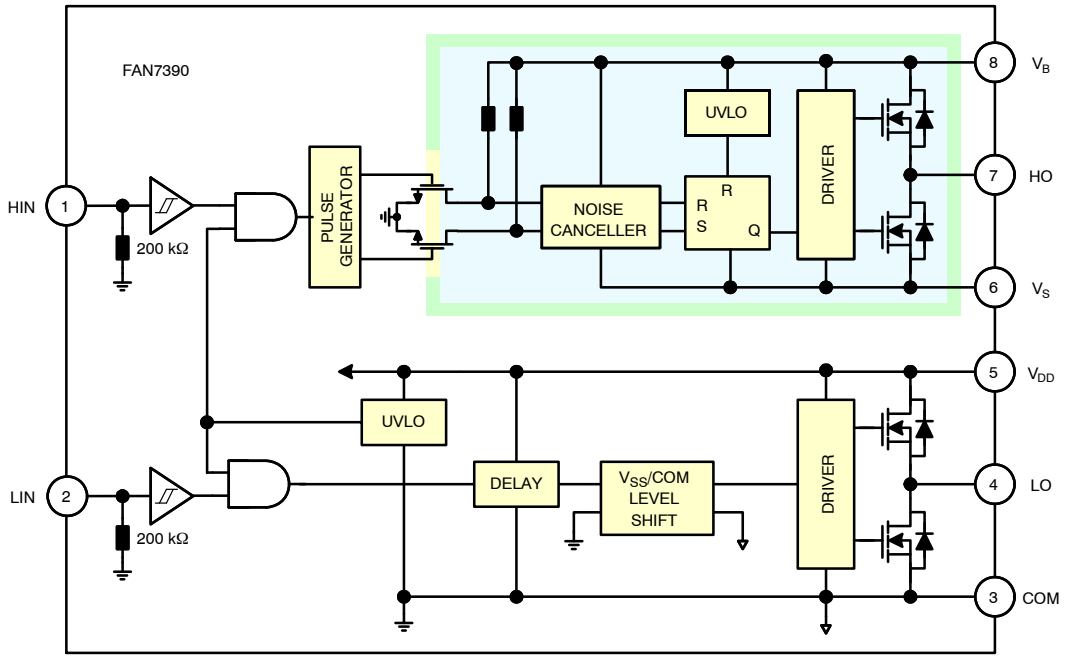

图 3. 功能模块框图 (参考8−SOP)

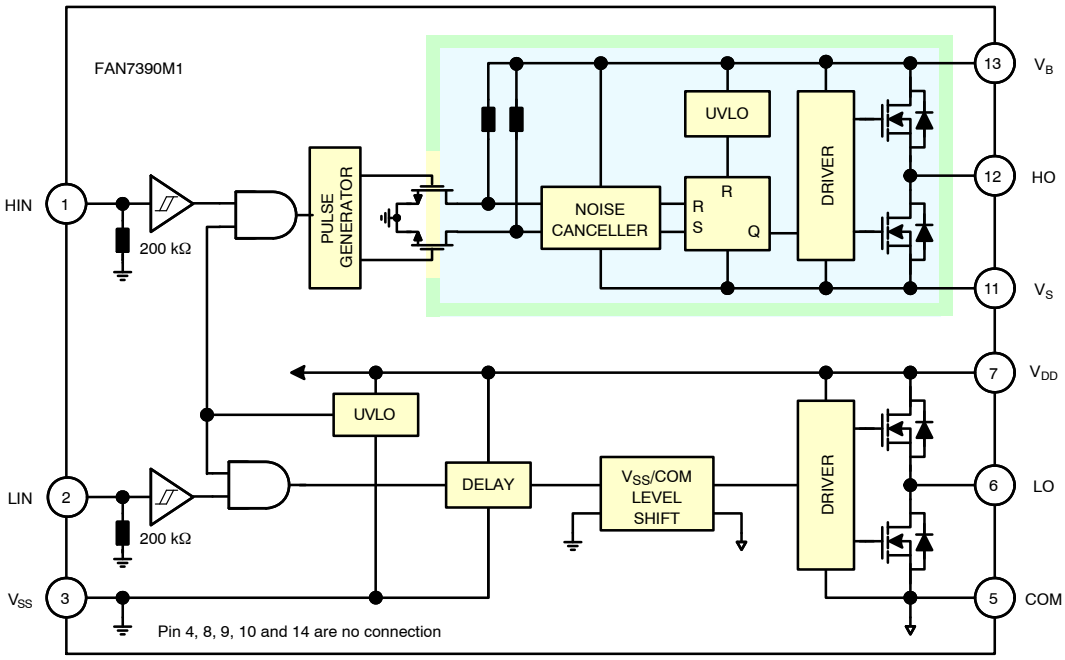

图 4. 功能模块框图 (参考14−SOP)

引脚布局

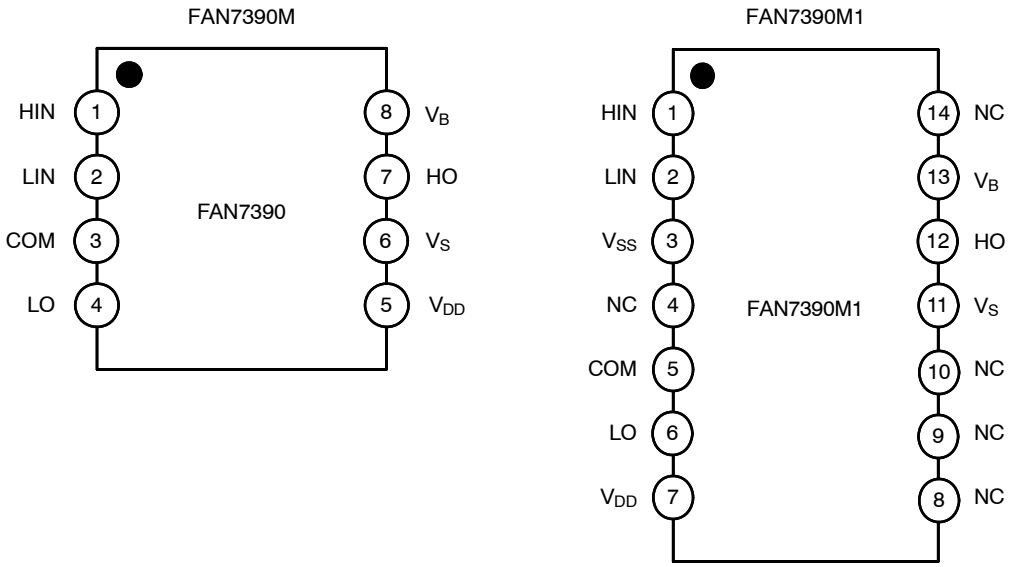

图 5. 引脚分配 (顶视图 / 俯视图)

引脚说明

8−Pin	14−Pin	名称	说明
1	1	HIN	高端栅极驱动器输出的逻辑输入
2	2	LIN	低端栅极驱动器输出的逻辑输入
	3	V_{SS}	逻辑地 (仅适用于 FAN7390M1)
3	5	COM	低端栅极返回
4	6	LO	低端栅极输出
5	7	V_{DD}	低端和逻辑电路的电源电压
6	11	V_S	高端浮动电源电压返回
7	12	HO	高端驱动输出
8	13	V_B	高端浮动电源
	4, 8, 9, 10, 14	NC	未连接

绝对最大额定值 (除非另有说明，T_A = 25°C。)

符号	特性	最小值	最大值	单位
V_S	高端浮动电源偏置电压	V_B – 25	V_B + 0.3	V
V_B	高端浮动电源电压	–0.3	625.0	V
V_{HO}	高端浮动输出电压 HO	V_S – 0.3	V_B + 0.3	V
V_{DD}	低端和固定逻辑电源电压	–0.3	25.0	V
V_{LO}	低端输出电压 LO	–0.3	V_{DD} + 0.3	V
V_{IN}	逻辑输入电压 (HIN, LIN)	V_{SS} – 0.3	V_{DD} + 0.3	V
V_{SS}	逻辑地 (仅适用于FAN7390M1)	V_{DD} – 25	V_{DD} + 0.3	V
dV_S/dt	允许的偏置电压转换速率	–	50	V/ns
P_D (注意 1, 2, 3)	功耗	8–SOP	0.625	W
		14–SOP	1.000	
θ_{JA}	结至环境热阻	8–SOP	200	°C/W
		14–SOP	110	
T_J	结温	–	+150	°C
T_{STG}	存储温度	–	+150	°C

Stresses exceeding those listed in the Maximum Ratings table may damage the device. If any of these limits are exceeded, device functionality should not be assumed, damage may occur and reliability may be affected.
(参考译文)
如果电压超过最大额定值表中列出的值范围，器件可能会损坏。如果超过任何这些限值，将无法保证器件功能，可能会导致器件损坏，影响可靠性。

1. 安装到 76.2 x 114.3 x 1.6 mm PCB 板 (FR–4 环氧玻璃材料)。
2. 参考以下标准：
   JESD51–2：集成电路热测试方法环境条件 – 自然对流
   JESD51–3：含铅表面贴装封装的低有效导热系数测试板
3. 在任何情况下，都不要超过 P_D。

推荐工作条件

符号	参数	最小值	最大值	单位
V_B	高端浮动电源电压	V_S + 10	V_S + 22	V
V_S	高端浮动电源偏置电压	6 – V_{DD}	600	V
V_{HO}	高端输出电压	V_S	V_B	V
V_{DD}	低端和逻辑电源电压	10	22	V
V_{LO}	低端输出电压	COM	V_{DD}	V
V_{IN}	逻辑输入电压 (HIN, LIN)	V_{SS}	V_{DD}	V
T_A	操作环境温度	–40	+125	°C

Functional operation above the stresses listed in the Recommended Operating Ranges is not implied. Extended exposure to stresses beyond the Recommended Operating Ranges limits may affect device reliability.
(参考译文)
高于推荐工作范围表格中所列电压时，不保证能够正常运行。长时间在推荐工作范围表格中规定范围以外的电压下运行，可能会影响器件的可靠性。

电气特性 (V_{BIAS} (V_{DD}，V_{BS}) = 15.0 V，V_S = V_{SS} = COM，T_A = 25°C，除非另有说明 V_{IL}、V_{IH} 和 I_{IN} 参数以 V_{SS}/COM 作为基准，适用于各自的输入信号 HIN 和 LIN。V_O 和 I_O COM 和 V_S 作为基准，适用于各自的输出信号 HO 和 LO。)

符号	特性	测试条件	最小值	典型值	最大值	单位
电源部分 (V_{DD} 和 V_{BS})						
V_{DDUV+} V_{BSUV+}	V_{DD} 和 V_{BS} 电源欠压正向阈值		8.0	8.8	9.8	V
V_{DDUV-} V_{BSUV-}	V_{DD} 和 V_{BS} 电源欠压负向阈值		7.4	8.3	9.0	
V_{DDUVH} V_{BSUVH}	V_{DD} 和 V_{BS} 电源欠压锁定滞洄电压		–	0.5	–	
I_{LK}	偏置漏电流	V_B = V_S = 600 V	–	–	50	μA
I_{QBS}	V_{BS} 静态电源电流	V_{IN} = 0 V 或 5 V	–	45	80	
I_{QDD}	V_{DD} 电源静态电流	V_{IN} = 0 V 或 5 V	–	75	110	
I_{PBS}	V_{BS} 电源静态电流	f_{IN} = 20 kHz, rms 值	–	530	640	μA
I_{PDD}	V_{DD} 电源工作电流	f_{IN} = 20 kHz, rms 值	–	530	640	
逻辑输入部分 (HIN, LIN)						
V_{IH}	逻辑 “1” 输入电压		2.5	–	–	V
V_{IL}	逻辑 “0” 输入电压		–	–	1.2	
I_{IN+}	逻辑 “1” 输入偏置电流	V_{IN} = 5 V	–	25	50	μA
I_{IN-}	逻辑 “0” 输入偏置电流	V_{IN} = 0 V	–	1.0	2.0	
R_{IN}	输入下拉电阻		100	200	–	kΩ
栅极驱动器输出部分 (HO, LO)						
V_{OH}	高电平输出电压，V_{BIAS}–V_O	无负载	–	–	1.0	V
V_{OL}	低电平输出电压，V_O	无负载	–	–	35	mV
I_{O+}	输出高电平短路脉冲电流t (注意 4)	V_O = 0 V, V_{IN} = 5 V with PW < 1 0 μs	3.5	4.5		A
I_{O-}	输出低电平短路脉冲电流 (注意 4)	V_O = 15 V, V_{IN} = 0 V with PW < 10 μs	3.5	4.5	–	
V_S	当 HIN 信号传输至 HO 时，容许 V_S 引脚负电压		–	–9.8	–7.0	V
V_{SS}–COM	V_{SS}–COM/COM–V_{SS} 电压持久性		–7.0	–	7.0	V

Product parametric performance is indicated in the Electrical Characteristics for the listed test conditions, unless otherwise noted. Product performance may not be indicated by the Electrical Characteristics if operated under different conditions.
(参考译文)
除非另有说明，“电气特性”表格中列出的是所列测试条件下的产品性能参数。如果在不同条件下运行，产品性能可能与“电气特性”表格中所列性能参数不一致。
4. 参数由设计者提供。

动态电气特性 (V_{BIAS} (V_{DD}, V_{BS}) = 15.0 V, V_S = V_{SS} = COM = 0 V, C_L = 1000 pF 且 T_A = 25°C，除非另有说明。)

符号	特性	测试条件	最小值	典型值	最大值	单位
t_{on}	导通传输延时	V_S = 0 V	–	140	220	ns
t_{off}	关断传输延时	V_S = 0 V	–	140	220	
MT	延时匹配，HS 与 LS 导通 / 关断		–	0	50	
t_r	导通上升时间		–	25	50	
t_f	关断下降时间		–	20	45	

典型特性

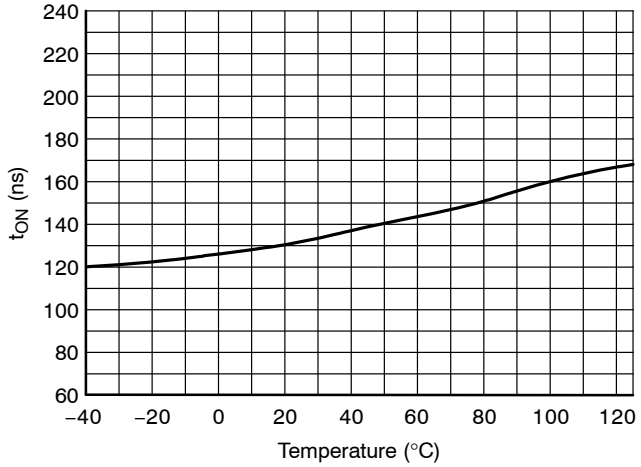

图 6. 开通传输延时与温度的关系

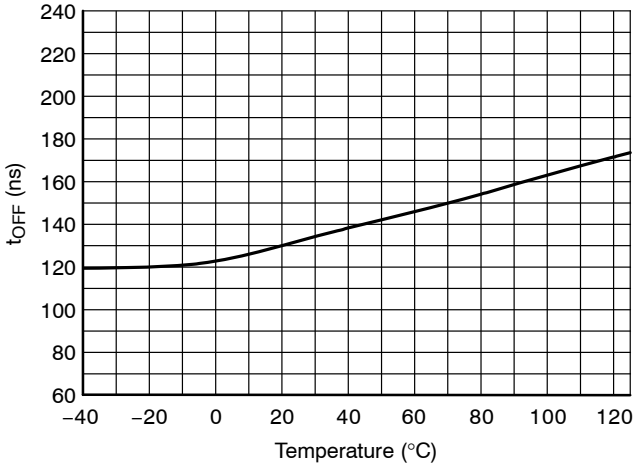

图 7. 关断传输延时与温度的关系

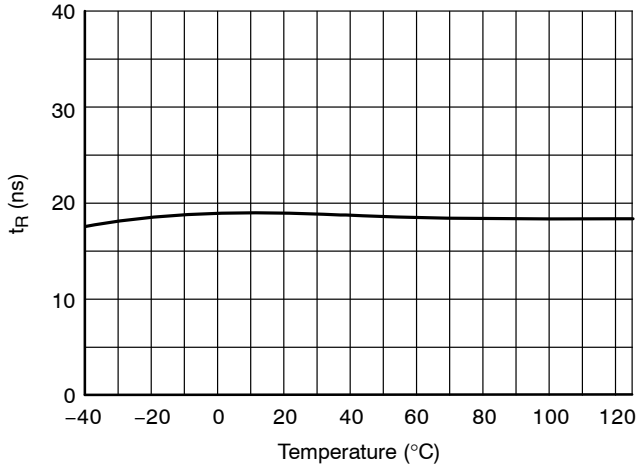

图 8. 导通上升时间与温度的关系

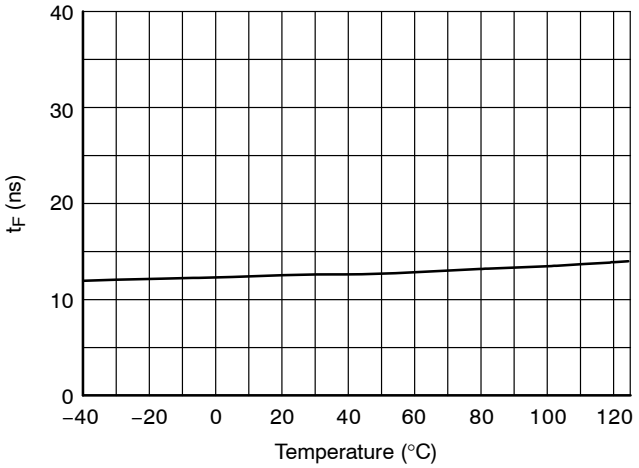

图 9. 导通下降时间与温度的关系

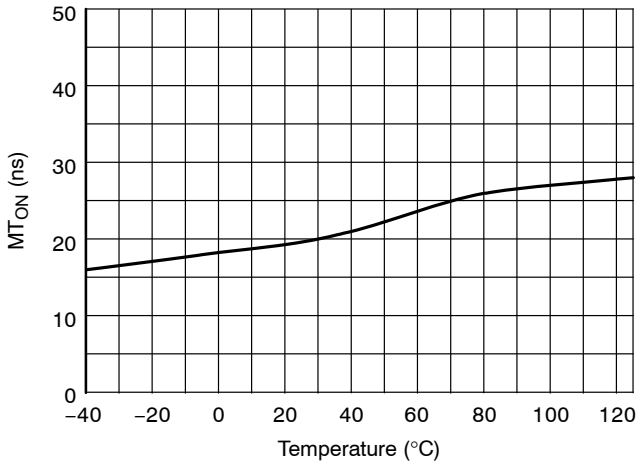

图 10. 导通延时匹配与温度的关系

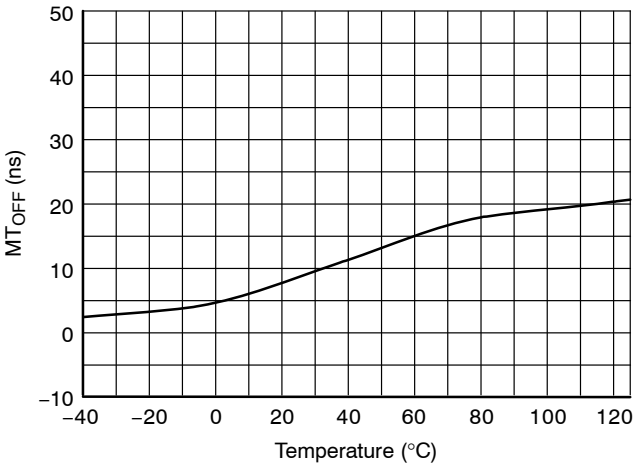

图 11. 关断延时匹配与温度的关系

典型特性 (续)

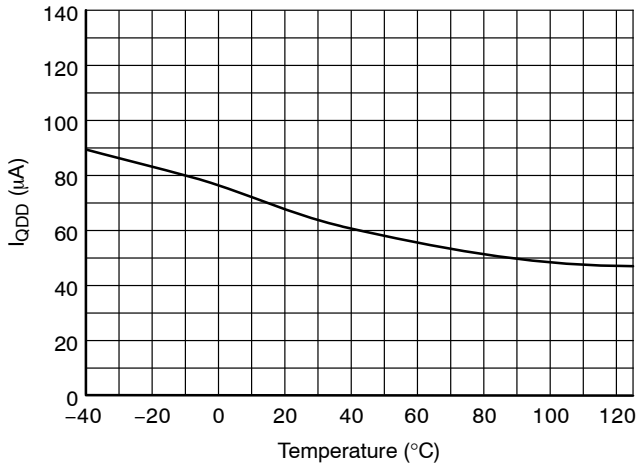

图 12. 静态 V_{DD} 电源电流与温度的关系

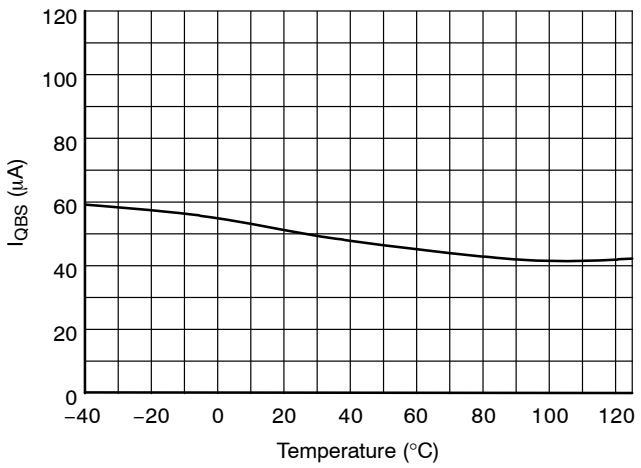

图 13. 静态 V_{BS} 电源电流与温度的关系

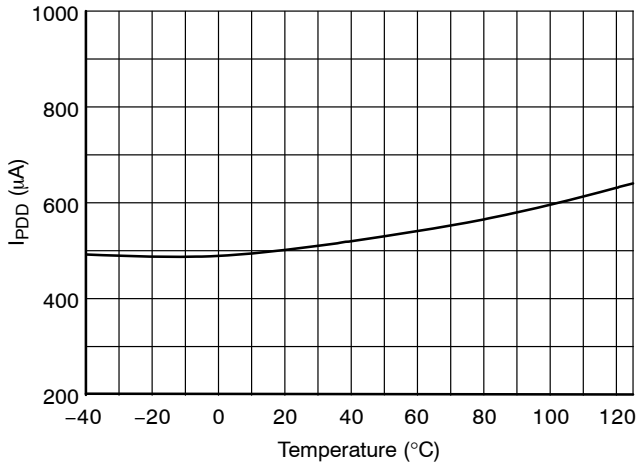

图 14. 工作时 V_{DD} 电源电流与温度的关系

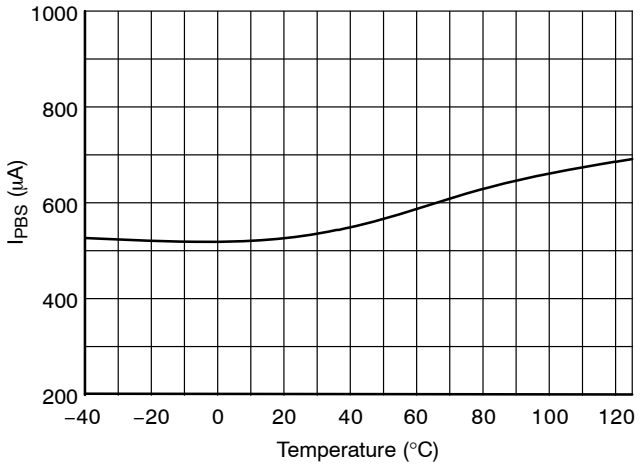

图 15. 工作时 V_{BS} 电源电流与温度的关系

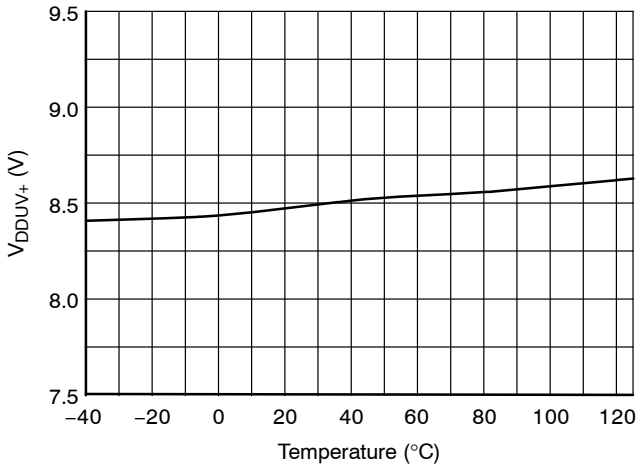

图 16. V_{DD} UVLO+ 与温度的关系

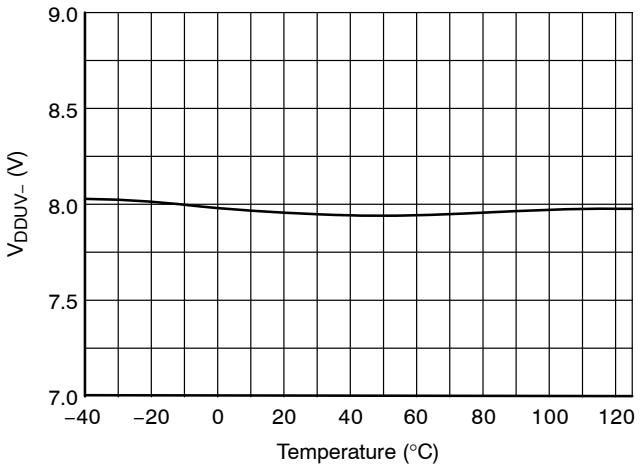

图 17. V_{DD} UVLO− 与温度的关系

典型特性 (续)

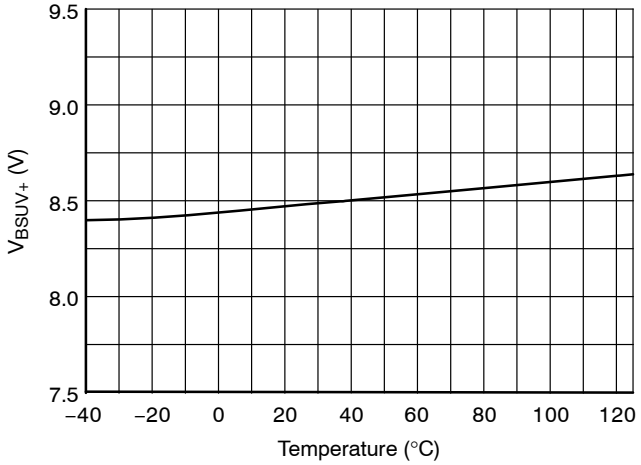

图 18. V_{BS} UVLO+ 与温度的关系

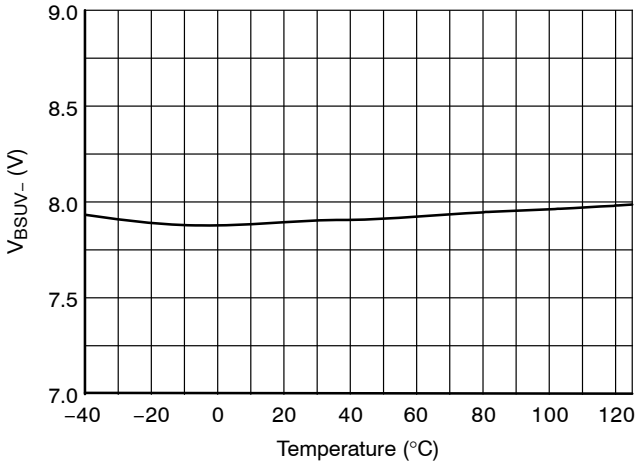

图 19. V_{BS} UVLO− 与温度的关系

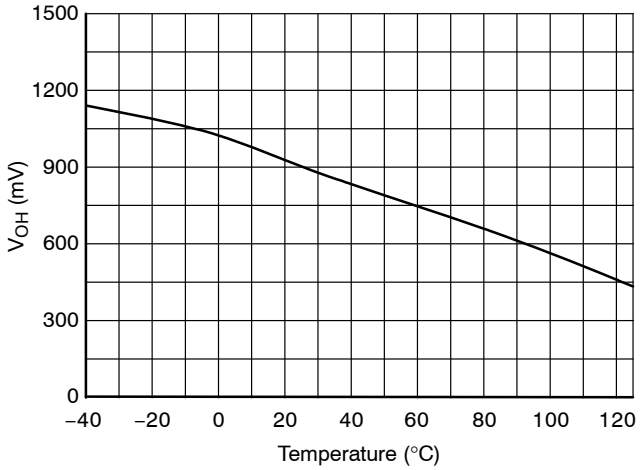

图 20. 高电平输出电压与温度的关系

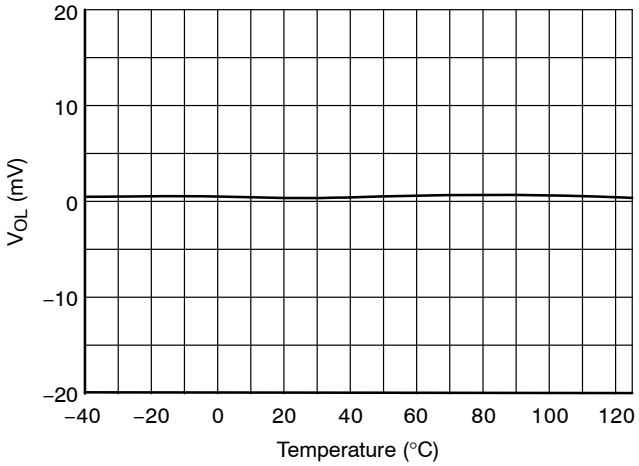

图 21. 低电平输出电压与温度的关系

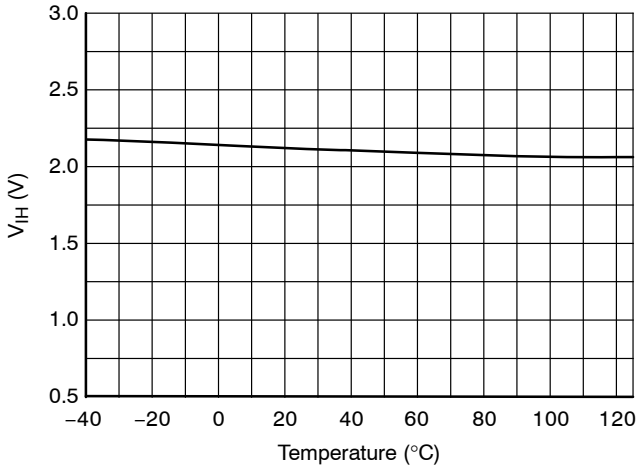

图 22. 逻辑高输入电压与温度的关系

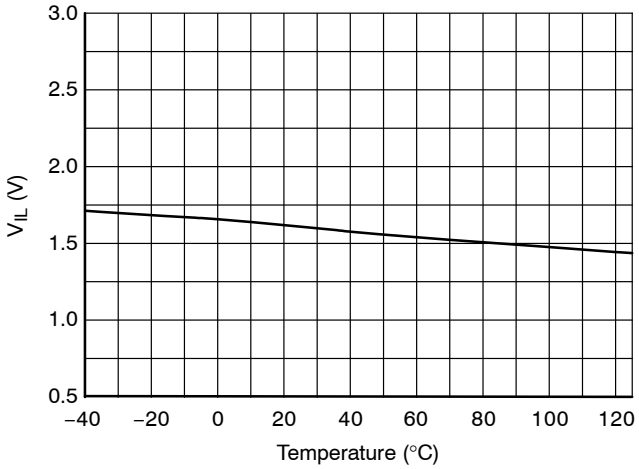

图 23. 低输入电压与温度的关系

典型特性 (续)

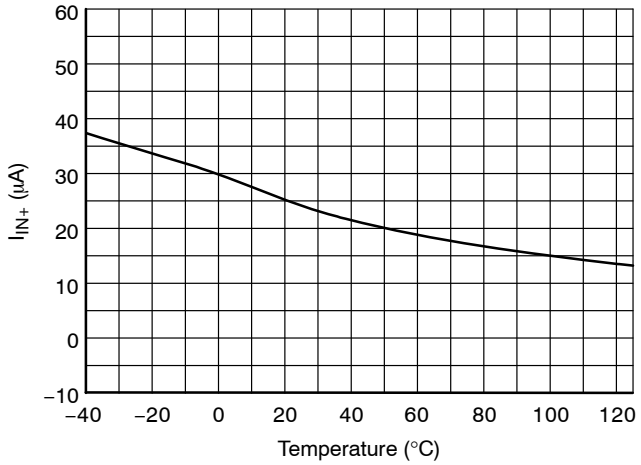

图 24. 逻辑输入高偏置电流与温度的关系

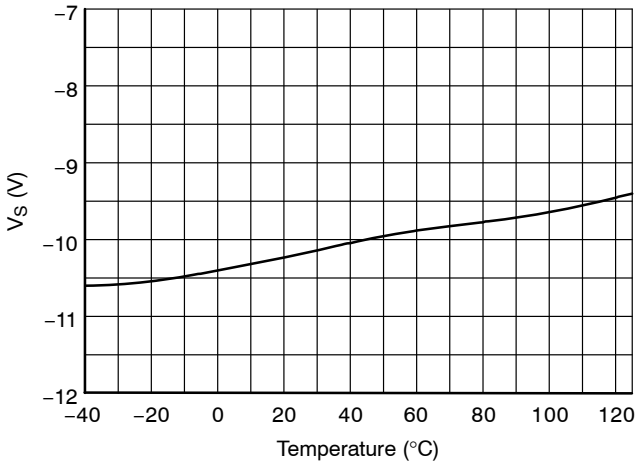

图 25. 容许的负 V_S 电压与温度的关系

开关时间定

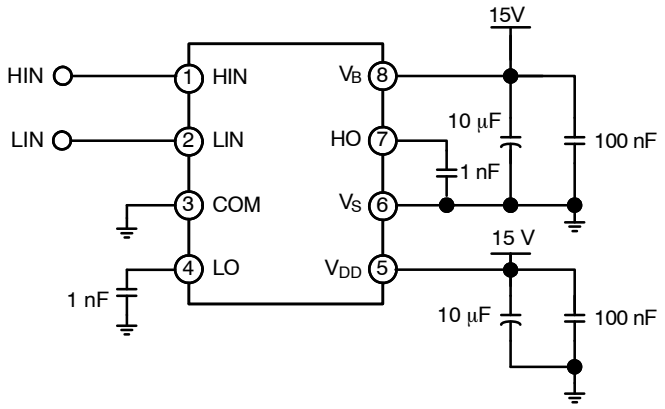

图 26. 开关时间测试电路 (参考8−SOP)

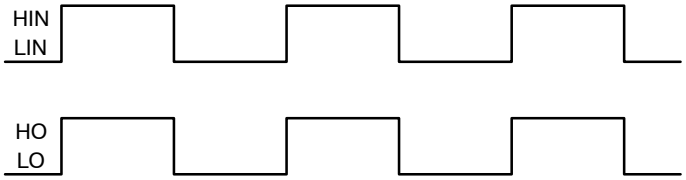

图 27. 输入 / 输出时序图

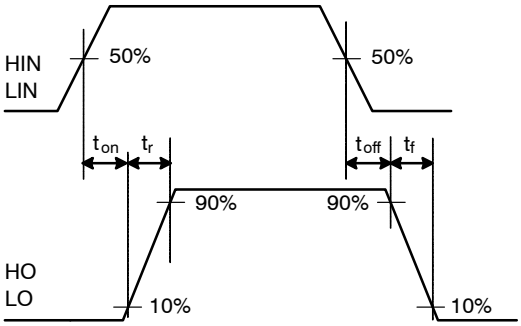

图 28. 开关时间波形定义

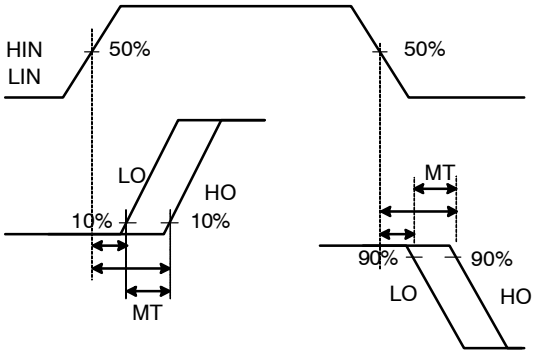

图 29. 开关匹配波形定义

ORDERING INFORMATION

器件编号	封装	工 作 温度范围	包装方法†
FAN7390MX	SOIC8 8−SOP (Pb−Free)	−40°C~125°C	3000 / 卷带和卷盘
FAN7390M1X	SOIC14 14−SOP (Pb−Free)		3000 / 卷带和卷盘

†For information on tape and reel specifications, including part orientation and tape sizes, please refer to our Tape and Reel Packaging Specifications Brochure, BRD8011/D.

SOIC8
CASE 751EG
ISSUE O

DATE 30 SEP 2016

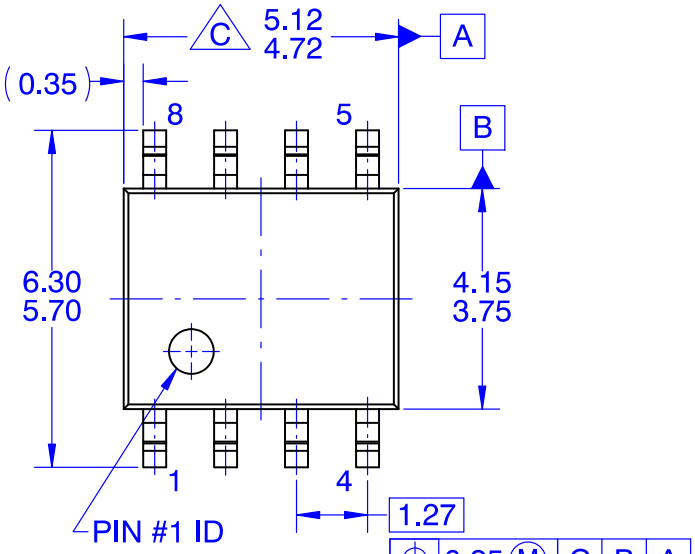

TOP VIEW

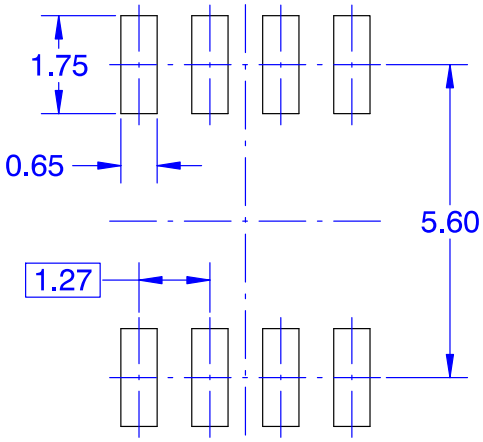

LAND PATTERN RECOMMENDATION

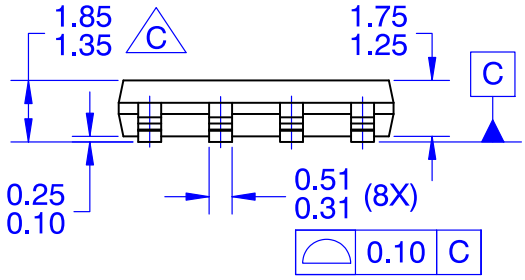

FRONT VIEW

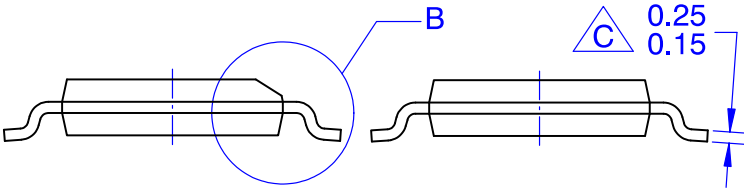

OPTION A
BEVEL EDGE

OPTION B
NON–BEVEL EDGE

SIDE VIEW

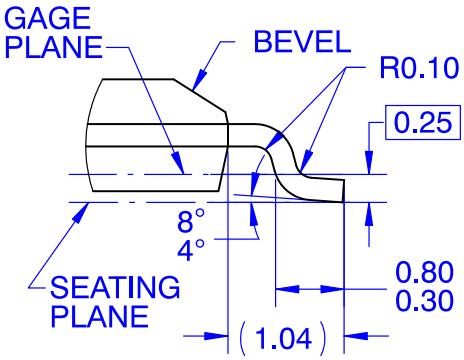

DETAIL "B"
SCALE 2:1

NOTES: UNLESS OTHERWISED SPECIFIED

A. THIS PACKAGE CONFORMS TO JEDEC MS–012 VARIATION A EXCEPT WHERE NOTED.
B. ALL DIMENSIONS ARE IN MILLIMETERS
C. OUT OF JEDEC STANDARD VALUE
D. DIMENSIONS ARE EXCLUSIVE OF BURRS, MOLD FLASH AND TIE BAR EXTRUSIONS.
E. LAND PATTERN AS PER IPC SOIC127P600X175–8M

DOCUMENT NUMBER:	**98AON13741G**	Electronic versions are uncontrolled except when accessed directly from the Document Repository. Printed versions are uncontrolled except when stamped "CONTROLLED COPY" in red.
DESCRIPTION:	**SOIC8**	**PAGE 1 OF 1**

ON Semiconductor and ON are trademarks of Semiconductor Components Industries, LLC dba ON Semiconductor or its subsidiaries in the United States and/or other countries. ON Semiconductor reserves the right to make changes without further notice to any products herein. ON Semiconductor makes no warranty, representation or guarantee regarding the suitability of its products for any particular purpose, nor does ON Semiconductor assume any liability arising out of the application or use of any product or circuit, and specifically disclaims any and all liability, including without limitation special, consequential or incidental damages. ON Semiconductor does not convey any license under its patent rights nor the rights of others.

SOIC14 N
CASE 751ER
ISSUE O

DATE 31 DEC 2016

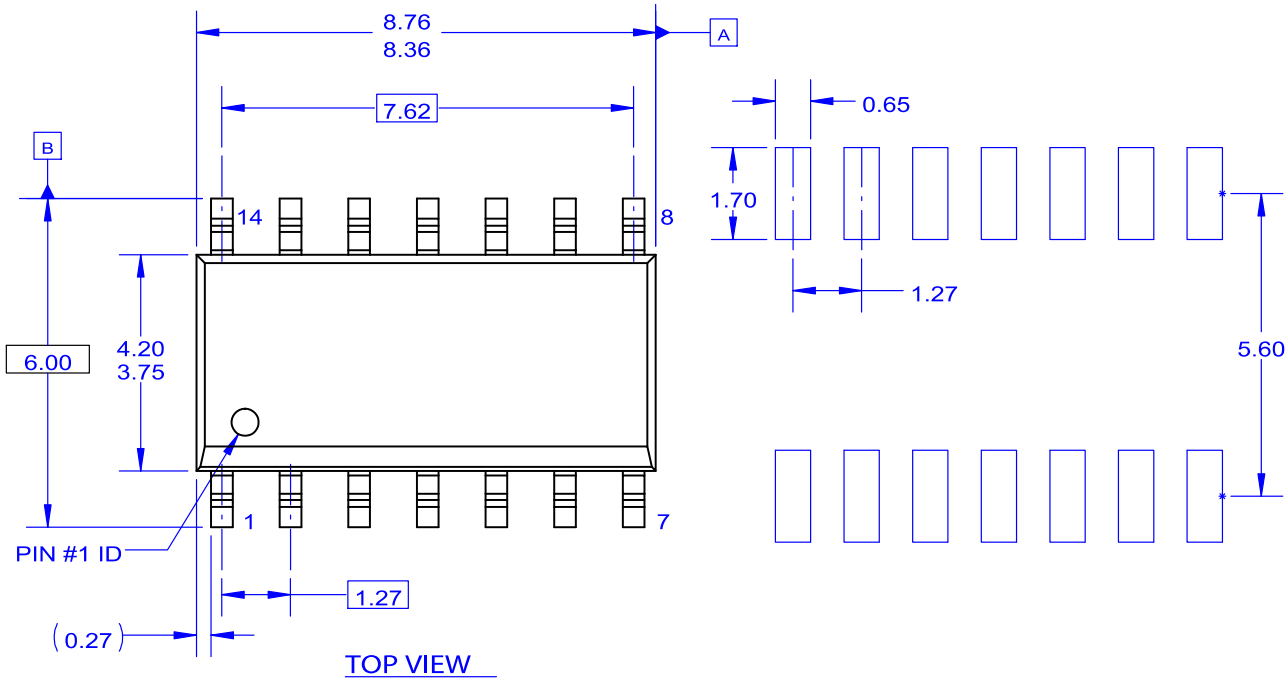

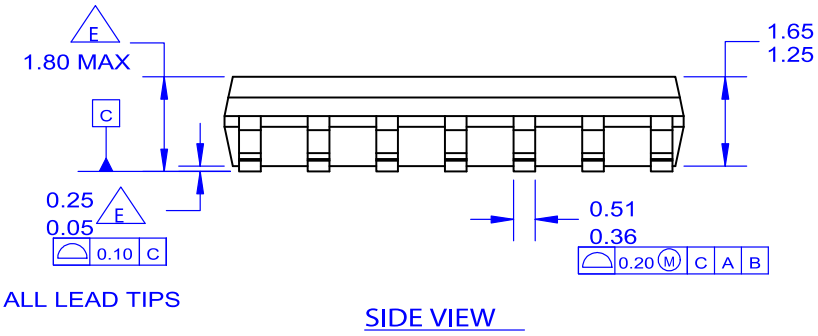

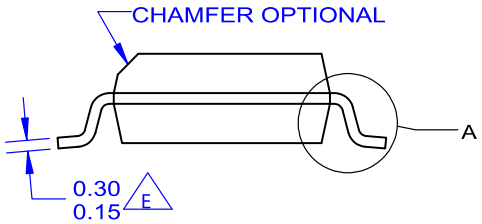

NOTES: UNLESS OTHERWISE SPECIFIED

A. THIS PACKAGE REFERENCE TO JEDEC MS-012 VARIATION AB.
B. ALL DIMENSIONS ARE IN MILLIMETERS.
C. DIMENSIONS ARE EXCLUSIVE OF BURRS, MOLD FLASH AND TIE BAR EXTRUSIONS.
D. DIMENSIONS AND TOLERANCES AS PER ASME Y14.5-1994.
E. OUT OF JEDEC STANDARD VALUE.

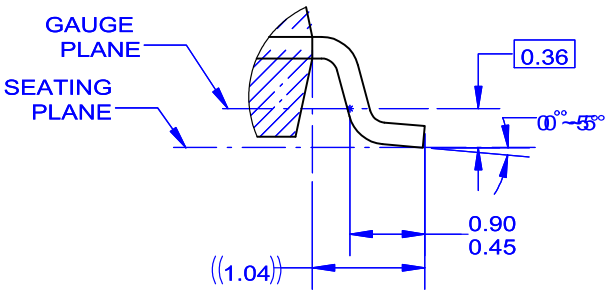

DETAIL "A"
SCALE 2:1

DOCUMENT NUMBER:	98AON13761G	Electronic versions are uncontrolled except when accessed directly from the Document Repository. Printed versions are uncontrolled except when stamped "CONTROLLED COPY" in red.
DESCRIPTION:	SOIC14 N	PAGE 1 OF 1

ON Semiconductor and ON are trademarks of Semiconductor Components Industries, LLC dba ON Semiconductor or its subsidiaries in the United States and/or other countries. ON Semiconductor reserves the right to make changes without further notice to any products herein. ON Semiconductor makes no warranty, representation or guarantee regarding the suitability of its products for any particular purpose, nor does ON Semiconductor assume any liability arising out of the application or use of any product or circuit, and specifically disclaims any and all liability, including without limitation special, consequential or incidental damages. ON Semiconductor does not convey any license under its patent rights nor the rights of others.

onsemi, onsemi, and other names, marks, and brands are registered and/or common law trademarks of Semiconductor Components Industries, LLC dba "**onsemi**" or its affiliates and/or subsidiaries in the United States and/or other countries. **onsemi** owns the rights to a number of patents, trademarks, copyrights, trade secrets, and other intellectual property. A listing of **onsemi**'s product/patent coverage may be accessed at www.onsemi.com/site/pdf/Patent−Marking.pdf. **onsemi** reserves the right to make changes at any time to any products or information herein, without notice. The information herein is provided "as−is" and **onsemi** makes no warranty, representation or guarantee regarding the accuracy of the information, product features, availability, functionality, or suitability of its products for any particular purpose, nor does **onsemi** assume any liability arising out of the application or use of any product or circuit, and specifically disclaims any and all liability, including without limitation special, consequential or incidental damages. Buyer is responsible for its products and applications using **onsemi** products, including compliance with all laws, regulations and safety requirements or standards, regardless of any support or applications information provided by **onsemi**. "Typical" parameters which may be provided in **onsemi** data sheets and/or specifications can and do vary in different applications and actual performance may vary over time. All operating parameters, including "Typicals" must be validated for each customer application by customer's technical experts. **onsemi** does not convey any license under any of its intellectual property rights nor the rights of others. **onsemi** products are not designed, intended, or authorized for use as a critical component in life support systems or any FDA Class 3 medical devices or medical devices with a same or similar classification in a foreign jurisdiction or any devices intended for implantation in the human body. Should Buyer purchase or use **onsemi** products for any such unintended or unauthorized application, Buyer shall indemnify and hold **onsemi** and its officers, employees, subsidiaries, affiliates, and distributors harmless against all claims, costs, damages, and expenses, and reasonable attorney fees arising out of, directly or indirectly, any claim of personal injury or death associated with such unintended or unauthorized use, even if such claim alleges that **onsemi** was negligent regarding the design or manufacture of the part. **onsemi** is an Equal Opportunity/Affirmative Action Employer. This literature is subject to all applicable copyright laws and is not for resale in any manner.

ADDITIONAL INFORMATION

TECHNICAL PUBLICATIONS:
Technical Library: www.onsemi.com/design/resources/technical−documentation
onsemi Website: www.onsemi.com

ONLINE SUPPORT: www.onsemi.com/support
For additional information, please contact your local Sales Representative at
www.onsemi.com/support/sales