3.3 V 200 MHz 1:2 LVCMOS/LVTTL Low Skew Fanout Buffer

NB3M8302C

SOIC−8
D SUFFIX
CASE 751

Description

The NB3M8302C is 1:2 fanout buffer with LVCMOS/LVTTL input and output. The device supports the core supply voltage of 3.3 V (V_{DD} pin) and output supply voltage of 2.5 V or 3.3 V (V_{DDO} pin). The V_{DDO} pin powers the two single ended LVCMOS/LVTTL outputs.

The NB3M8302C is Form, Fit and Function (pin to pin) compatible to ICS8302 and ICS8302I. The NB3M8302C is qualified for industrial operating temperature range.

Features

- Input Clock Frequency up to 200 MHz
- Low Output to Output Skew: 25 ps typical
- Low Part to Part Skew: 250 ps typical
- Low Additive RMS Phase Jitter
- Input Clock Accepts LVCMOS/ LVTTL Levels
- Operating Voltage:
  - Core Supply: V_{DD} = 3.3 V ±5%
  - Output Supply: V_{DDO} = 3.3 V ±5% or 2.5 V ±5%
- Operating Temperature Range:
  - Industrial: −40°C to +85°C
- These Devices are Pb−Free and are RoHS Compliant

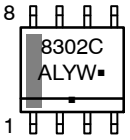

MARKING DIAGRAM

A	= Assembly Location
L	= Wafer Lot
Y	= Year
W	= Work Week
▪	= Pb−Free Package

(Note: Microdot may be in either location)

ORDERING INFORMATION

See detailed ordering and shipping information in the package dimensions section on page 5 of this data sheet.

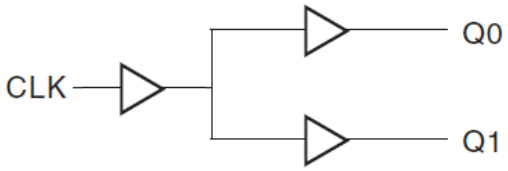

Figure 1. Block Diagram

© Semiconductor Components Industries, LLC, 2014

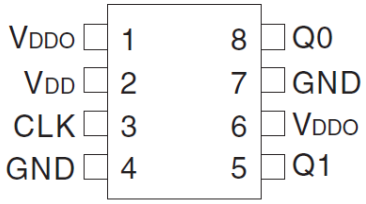

Figure 2. Pin Configuration (Top View)

Table 1. PIN DESCRIPTION

Pin Number	Name	Type	Description
1, 6	VDDO	Output Power	Clock output Supply pin.
2	VDD	Input and Core Power	Input and Core Supply pin.
3	CLK	LVCMOS/LVTTL Input	Clock Input. Internally pull−down.
4, 7	GND	Ground	Supply Ground.
5	Q1	LVCMOS/LVTTL Output	LVCMOS/LVTTL Clock output.
8	Q0	LVCMOS/LVTTL Output	LVCMOS/LVTTL Clock output.

Table 2. MAXIMUM RATINGS

Symbol	Parameter	Condition	Min	Max	Unit
V_{DD}, V_{DDO}	Power Supply		–	4.6	V
V_I	Input Voltage		−0.5	VDD + 0.5 V	V
T_{stg}	Storage Temperature		−65	+150	°C
θ_{JA}	Thermal Resistance (Junction to Ambient) SOIC−8	0 lfpm 500 lfpm		80 55	°C/W
θ_{JC}	Thermal Resistance (Junction to Case) (Note 1)			12−17	°C/W
T_{sol}	Wave Solder	3 sec		265	°C
MSL	Moisture Sensitivity SOIC−8	Indefinite Time Out of Drypack (Note 2)	Level 1		

Stresses exceeding those listed in the Maximum Ratings table may damage the device. If any of these limits are exceeded, device functionality should not be assumed, damage may occur and reliability may be affected.

1. JEDEC standard multilayer board – 2S2P (2 signal, 2 power)
2. For additional information, see Application Note AND8003/D.

Table 3. DC OPERATING CHARACTERISTICS
(V_{DD} = V_{DDO} = 3.3 V±5%, V_{DD} = 3.3 V±5%, V_{DDO} = 2.5 V±5%; T_A = −40°C to +85°C)

Symbol	Parameter	Condition	Min	Typ	Max	Unit
R_{IN}	Input Pull−down Resistor (CLK Pin)			51		kΩ
C_{IN}	Input Capacitance			4		pF
R_{OUT}	Output Impedance (Note 3)		5	7	12	Ω
C_{PD}	Power Dissipation Capacitance (per output)	V_{DD} = V_{DDO} = 3.465 V		22		pF
		V_{DD} = 3.465 V, V_{DDO} = 2.625 V		16		
V_{DD}	Core Supply Voltage		3.135	3.3	3.465	V
I_{IH}	Input High Current	V_{IN} = V_{DD} = 3.465 V			150	μA
I_{IL}	Input Low Current	V_{DD} 3.465 V, V_{IN} = 0.0 V	−0.5			μA

Product parametric performance is indicated in the Electrical Characteristics for the listed test conditions, unless otherwise noted. Product performance may not be indicated by the Electrical Characteristics if operated under different conditions.

3. Outputs terminated with 50 Ω to V_{DDO}/2. See Figure 4 for supply considerations.

Table 4. DC OPERATING CHARACTERISTICS (T_A = −40°C to +85°C)

Symbol	Parameter	Condition	Min	Max	Unit
V_{DD} = 3.3 V±5%, V_{DDO} = 2.5 V±5%					
V_{DDO}	Output Supply Voltage		2.375	2.625	V
V_{OH}	Output HIGH Voltage	I_{OH} = −16 mA	2.1		V
		I_{OH} = −100 μA	2.2		
		50 Ω to V_{DDO}/2	1.8		
V_{OL}	Output LOW Voltage	I_{OL} = 16 mA		0.15	V
		I_{OL} = 100 μA		0.2	
		50 Ω to V_{DDO}/2		0.5	
V_{DD} = V_{DDO} = 3.3 V±5%					
V_{DDO}	Output Supply Voltage		3.135	3.465	V
V_{OH}	Output HIGH Voltage	I_{OH} = −16 mA	2.9		V
		I_{OH} = −100 μA	2.9		
		50 Ω to V_{DDO}/2	2.6		
V_{OL}	Output LOW Voltage	I_{OL} = 16 mA		0.15	V
		I_{OL} = 100 μA		0.2	
		50 Ω to V_{DDO}/2		0.5	

Table 5. DC OPERATING CHARACTERISTICS (T_A = −40°C to +85°C; V_{DD} = V_{DDO} = 3.3 V±5%, V_{DD} = 3.3 V±5%, V_{DDO} = 2.5 V±5%)

Symbol	Parameter	Condition	Min	Max	Unit
I_{DD}	Quiescent Power Supply Current	No Load		13	mA
I_{DDO}	Quiescent Power Supply Current	No Load		4	mA
V_{IH}	Input HIGH Voltage		2	V_{DD} + 0.3	V
V_{IL}	Input LOW Voltage		−0.3	1.3	V

Table 6. AC CHARACTERISTICS (Note 4)

Symbol	Parameter	Condition	Min	Typ	Max	Unit
T_A = −40°C to +85°C; V_{DD} = V_{DDO} = 3.3 V±5%						
F_{IN}	Input Frequency				200	MHz
t_{PLH}	Propagation Delay (Note 5)	Fin = 200 MHz	1.9		3.1	ns
t_{SKEW}	Output to Output Skew(Note 6)			25	85	ps
	Part to Part Skew (Note 6)			250	800	
t_{SKEWDC}	Output Duty Cycle (see Figure 3)	Fin ≤ 133 MHz	45		55	%
		133 MHz < Fin < 200 MHz	40		60	
tr/tf	Output rise and fall times (Note 7)	20% to 80%, RS = 33 Ω	250		800	ps
T_A = −40°C to +85°C; V_{DD} = 3.3 V±5%, V_{DDO} = 2.5 V±5%						
F_{IN}	Input Frequency				200	MHz
t_{PLH}	Propagation Delay (Note 5)	Fin = 200 MHz	2.0		3.3	ns
t_{SKEW}	Output to Output Skew(Note 6)			25	85	ps
	Part to Part Skew (Note 6)			250	800	
t_{SKEWDC}	Output Duty Cycle (see Figure 3)	Fin ≤ 133 MHz	45		55	%
		133 MHz < Fin < 200 MHz	40		60	
tr/tf	Output rise and fall times (Note 7)	20% to 80%, RS = 33 Ω	200		650	ps

4. Clock input with 50% duty cycle. Outputs terminated with 50 Ω to V_{DDO}/2. See Figures 3 and 4.
5. Measured from V_{DD}/2 of the input to V_{DDO}/2 of the output.
6. Similar input conditions and the same supply voltages. Measured at V_{DDO} /2. See Figures 3 and 4.
7. RS is Series Resistance at the clock outputs.

NOTE: Device will meet the specifications after thermal equilibrium has been established when mounted in a test socket or printed circuit board with maintained transverse airflow greater than 500 lfpm. Electrical parameters are guaranteed only over the declared operating temperature range. Functional operation of the device exceeding these conditions is not implied. Device specification limit values are applied individually under normal operating conditions and not valid simultaneously.

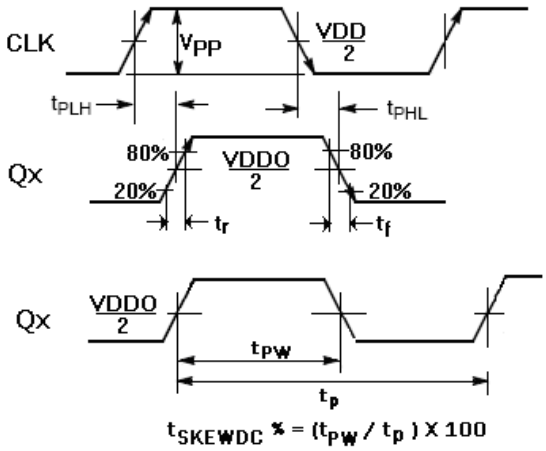

Figure 3. AC Reference Measurement

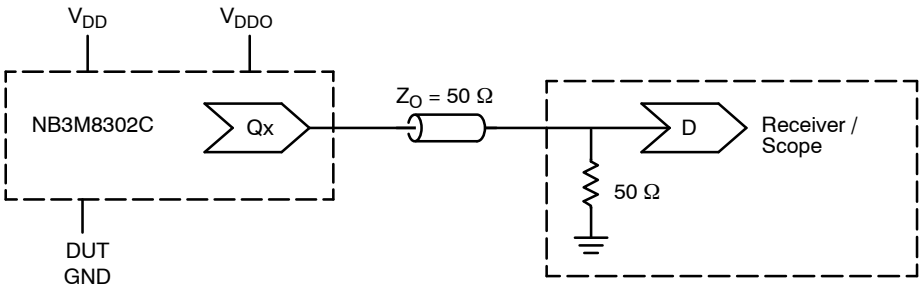

Spec Condition:	TEST SETUP V_{DD}:	TEST SETUP V_{DDO}:	TEST SETUP DUT GND:
V_{DD} = V_{DDO} = 3.3 V ±5%	1.65 V ±5%	1.65 V ±5%	−1.65 V ±5%
V_{DD} = 3.3 V ±5%; V_{DDO} = 2.5 V ±5%	2.05 V ±5%	1.25 V ±5%	−1.25 V ±5%

Figure 4. Output Driver Typical Device Evaluation and Termination Setup

ORDERING INFORMATION

Device	Package	Shipping†
NB3M8302CDG	SOIC−8 (Pb−Free)	98 Units / Rail
NB3M8302CDR2G	SOIC−8 (Pb−Free)	2500 / Tape & Reel

†For information on tape and reel specifications, including part orientation and tape sizes, please refer to our Tape and Reel Packaging Specifications Brochure, BRD8011/D.

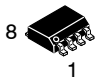

SCALE 1:1

SOIC−8 NB
CASE 751−07
ISSUE AK

DATE 16 FEB 2011

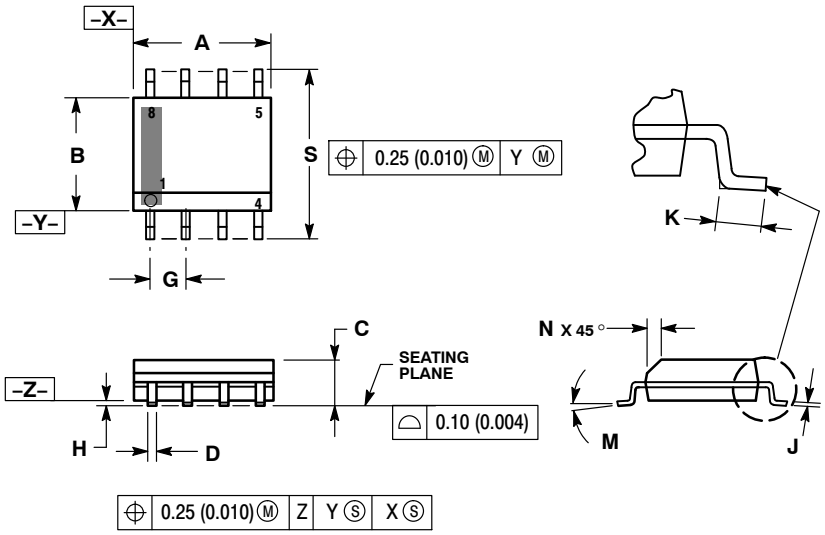

NOTES:
1. DIMENSIONING AND TOLERANCING PER ANSI Y14.5M, 1982.
2. CONTROLLING DIMENSION: MILLIMETER.
3. DIMENSION A AND B DO NOT INCLUDE MOLD PROTRUSION.
4. MAXIMUM MOLD PROTRUSION 0.15 (0.006) PER SIDE.
5. DIMENSION D DOES NOT INCLUDE DAMBAR PROTRUSION. ALLOWABLE DAMBAR PROTRUSION SHALL BE 0.127 (0.005) TOTAL IN EXCESS OF THE D DIMENSION AT MAXIMUM MATERIAL CONDITION.
6. 751−01 THRU 751−06 ARE OBSOLETE. NEW STANDARD IS 751−07.

	MILLIMETERS		INCHES	
DIM	MIN	MAX	MIN	MAX
A	4.80	5.00	0.189	0.197
B	3.80	4.00	0.150	0.157
C	1.35	1.75	0.053	0.069
D	0.33	0.51	0.013	0.020
G	1.27 BSC		0.050 BSC	
H	0.10	0.25	0.004	0.010
J	0.19	0.25	0.007	0.010
K	0.40	1.27	0.016	0.050
M	0 °	8 °	0 °	8 °
N	0.25	0.50	0.010	0.020
S	5.80	6.20	0.228	0.244

SOLDERING FOOTPRINT*

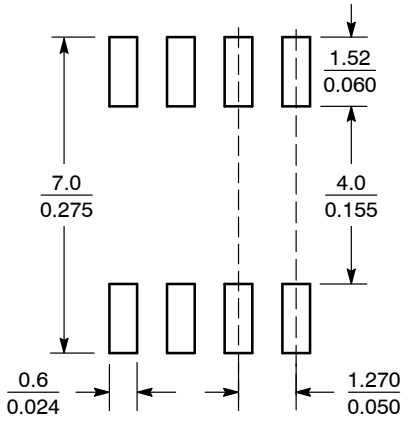

SCALE 6:1 $\left(\frac{\text{mm}}{\text{inches}}\right)$

*For additional information on our Pb−Free strategy and soldering details, please download the ON Semiconductor Soldering and Mounting Techniques Reference Manual, SOLDERRM/D.

GENERIC MARKING DIAGRAM*

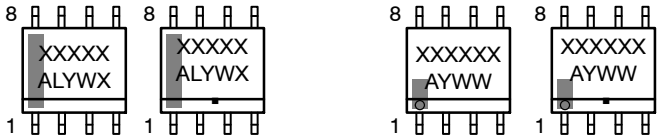

XXXXX = Specific Device Code
A = Assembly Location
L = Wafer Lot
Y = Year
W = Work Week
▪ = Pb−Free Package

XXXXXX = Specific Device Code
A = Assembly Location
Y = Year
WW = Work Week
▪ = Pb−Free Package

*This information is generic. Please refer to device data sheet for actual part marking. Pb−Free indicator, "G" or microdot "▪", may or may not be present. Some products may not follow the Generic Marking.

STYLES ON PAGE 2

DOCUMENT NUMBER:	98ASB42564B	Electronic versions are uncontrolled except when accessed directly from the Document Repository. Printed versions are uncontrolled except when stamped "CONTROLLED COPY" in red.
DESCRIPTION:	SOIC−8 NB	PAGE 1 OF 2

onsemi and onsemi are trademarks of Semiconductor Components Industries, LLC dba **onsemi** or its subsidiaries in the United States and/or other countries. **onsemi** reserves the right to make changes without further notice to any products herein. **onsemi** makes no warranty, representation or guarantee regarding the suitability of its products for any particular purpose, nor does **onsemi** assume any liability arising out of the application or use of any product or circuit, and specifically disclaims any and all liability, including without limitation special, consequential or incidental damages. **onsemi** does not convey any license under its patent rights nor the rights of others.

SOIC−8 NB
CASE 751−07
ISSUE AK

DATE 16 FEB 2011

STYLE 1:
PIN 1. EMITTER
2. COLLECTOR
3. COLLECTOR
4. EMITTER
5. EMITTER
6. BASE
7. BASE
8. EMITTER

STYLE 2:
PIN 1. COLLECTOR, DIE, #1
2. COLLECTOR, #1
3. COLLECTOR, #2
4. COLLECTOR, #2
5. BASE, #2
6. EMITTER, #2
7. BASE, #1
8. EMITTER, #1

STYLE 3:
PIN 1. DRAIN, DIE #1
2. DRAIN, #1
3. DRAIN, #2
4. DRAIN, #2
5. GATE, #2
6. SOURCE, #2
7. GATE, #1
8. SOURCE, #1

STYLE 4:
PIN 1. ANODE
2. ANODE
3. ANODE
4. ANODE
5. ANODE
6. ANODE
7. ANODE
8. COMMON CATHODE

STYLE 5:
PIN 1. DRAIN
2. DRAIN
3. DRAIN
4. DRAIN
5. GATE
6. GATE
7. SOURCE
8. SOURCE

STYLE 6:
PIN 1. SOURCE
2. DRAIN
3. DRAIN
4. SOURCE
5. SOURCE
6. GATE
7. GATE
8. SOURCE

STYLE 7:
PIN 1. INPUT
2. EXTERNAL BYPASS
3. THIRD STAGE SOURCE
4. GROUND
5. DRAIN
6. GATE 3
7. SECOND STAGE Vd
8. FIRST STAGE Vd

STYLE 8:
PIN 1. COLLECTOR, DIE #1
2. BASE, #1
3. BASE, #2
4. COLLECTOR, #2
5. COLLECTOR, #2
6. EMITTER, #2
7. EMITTER, #1
8. COLLECTOR, #1

STYLE 9:
PIN 1. EMITTER, COMMON
2. COLLECTOR, DIE #1
3. COLLECTOR, DIE #2
4. EMITTER, COMMON
5. EMITTER, COMMON
6. BASE, DIE #2
7. BASE, DIE #1
8. EMITTER, COMMON

STYLE 10:
PIN 1. GROUND
2. BIAS 1
3. OUTPUT
4. GROUND
5. GROUND
6. BIAS 2
7. INPUT
8. GROUND

STYLE 11:
PIN 1. SOURCE 1
2. GATE 1
3. SOURCE 2
4. GATE 2
5. DRAIN 2
6. DRAIN 2
7. DRAIN 1
8. DRAIN 1

STYLE 12:
PIN 1. SOURCE
2. SOURCE
3. SOURCE
4. GATE
5. DRAIN
6. DRAIN
7. DRAIN
8. DRAIN

STYLE 13:
PIN 1. N.C.
2. SOURCE
3. SOURCE
4. GATE
5. DRAIN
6. DRAIN
7. DRAIN
8. DRAIN

STYLE 14:
PIN 1. N−SOURCE
2. N−GATE
3. P−SOURCE
4. P−GATE
5. P−DRAIN
6. P−DRAIN
7. N−DRAIN
8. N−DRAIN

STYLE 15:
PIN 1. ANODE 1
2. ANODE 1
3. ANODE 1
4. ANODE 1
5. CATHODE, COMMON
6. CATHODE, COMMON
7. CATHODE, COMMON
8. CATHODE, COMMON

STYLE 16:
PIN 1. EMITTER, DIE #1
2. BASE, DIE #1
3. EMITTER, DIE #2
4. BASE, DIE #2
5. COLLECTOR, DIE #2
6. COLLECTOR, DIE #2
7. COLLECTOR, DIE #1
8. COLLECTOR, DIE #1

STYLE 17:
PIN 1. VCC
2. V2OUT
3. V1OUT
4. TXE
5. RXE
6. VEE
7. GND
8. ACC

STYLE 18:
PIN 1. ANODE
2. ANODE
3. SOURCE
4. GATE
5. DRAIN
6. DRAIN
7. CATHODE
8. CATHODE

STYLE 19:
PIN 1. SOURCE 1
2. GATE 1
3. SOURCE 2
4. GATE 2
5. DRAIN 2
6. MIRROR 2
7. DRAIN 1
8. MIRROR 1

STYLE 20:
PIN 1. SOURCE (N)
2. GATE (N)
3. SOURCE (P)
4. GATE (P)
5. DRAIN
6. DRAIN
7. DRAIN
8. DRAIN

STYLE 21:
PIN 1. CATHODE 1
2. CATHODE 2
3. CATHODE 3
4. CATHODE 4
5. CATHODE 5
6. COMMON ANODE
7. COMMON ANODE
8. CATHODE 6

STYLE 22:
PIN 1. I/O LINE 1
2. COMMON CATHODE/VCC
3. COMMON CATHODE/VCC
4. I/O LINE 3
5. COMMON ANODE/GND
6. I/O LINE 4
7. I/O LINE 5
8. COMMON ANODE/GND

STYLE 23:
PIN 1. LINE 1 IN
2. COMMON ANODE/GND
3. COMMON ANODE/GND
4. LINE 2 IN
5. LINE 2 OUT
6. COMMON ANODE/GND
7. COMMON ANODE/GND
8. LINE 1 OUT

STYLE 24:
PIN 1. BASE
2. EMITTER
3. COLLECTOR/ANODE
4. COLLECTOR/ANODE
5. CATHODE
6. CATHODE
7. COLLECTOR/ANODE
8. COLLECTOR/ANODE

STYLE 25:
PIN 1. VIN
2. N/C
3. REXT
4. GND
5. IOUT
6. IOUT
7. IOUT
8. IOUT

STYLE 26:
PIN 1. GND
2. dv/dt
3. ENABLE
4. ILIMIT
5. SOURCE
6. SOURCE
7. SOURCE
8. VCC

STYLE 27:
PIN 1. ILIMIT
2. OVLO
3. UVLO
4. INPUT+
5. SOURCE
6. SOURCE
7. SOURCE
8. DRAIN

STYLE 28:
PIN 1. SW_TO_GND
2. DASIC_OFF
3. DASIC_SW_DET
4. GND
5. V_MON
6. VBULK
7. VBULK
8. VIN

STYLE 29:
PIN 1. BASE, DIE #1
2. EMITTER, #1
3. BASE, #2
4. EMITTER, #2
5. COLLECTOR, #2
6. COLLECTOR, #2
7. COLLECTOR, #1
8. COLLECTOR, #1

STYLE 30:
PIN 1. DRAIN 1
2. DRAIN 1
3. GATE 2
4. SOURCE 2
5. SOURCE 1/DRAIN 2
6. SOURCE 1/DRAIN 2
7. SOURCE 1/DRAIN 2
8. GATE 1

DOCUMENT NUMBER:	**98ASB42564B**	Electronic versions are uncontrolled except when accessed directly from the Document Repository. Printed versions are uncontrolled except when stamped "CONTROLLED COPY" in red.
DESCRIPTION:	**SOIC−8 NB**	**PAGE 2 OF 2**

onsemi and onsemi are trademarks of Semiconductor Components Industries, LLC dba **onsemi** or its subsidiaries in the United States and/or other countries. **onsemi** reserves the right to make changes without further notice to any products herein. **onsemi** makes no warranty, representation or guarantee regarding the suitability of its products for any particular purpose, nor does **onsemi** assume any liability arising out of the application or use of any product or circuit, and specifically disclaims any and all liability, including without limitation special, consequential or incidental damages. **onsemi** does not convey any license under its patent rights nor the rights of others.

onsemi, onsemi, and other names, marks, and brands are registered and/or common law trademarks of Semiconductor Components Industries, LLC dba "**onsemi**" or its affiliates and/or subsidiaries in the United States and/or other countries. **onsemi** owns the rights to a number of patents, trademarks, copyrights, trade secrets, and other intellectual property. A listing of **onsemi**'s product/patent coverage may be accessed at www.onsemi.com/site/pdf/Patent−Marking.pdf. **onsemi** reserves the right to make changes at any time to any products or information herein, without notice. The information herein is provided "as−is" and **onsemi** makes no warranty, representation or guarantee regarding the accuracy of the information, product features, availability, functionality, or suitability of its products for any particular purpose, nor does **onsemi** assume any liability arising out of the application or use of any product or circuit, and specifically disclaims any and all liability, including without limitation special, consequential or incidental damages. Buyer is responsible for its products and applications using **onsemi** products, including compliance with all laws, regulations and safety requirements or standards, regardless of any support or applications information provided by **onsemi**. "Typical" parameters which may be provided in **onsemi** data sheets and/or specifications can and do vary in different applications and actual performance may vary over time. All operating parameters, including "Typicals" must be validated for each customer application by customer's technical experts. **onsemi** does not convey any license under any of its intellectual property rights nor the rights of others. **onsemi** products are not designed, intended, or authorized for use as a critical component in life support systems or any FDA Class 3 medical devices or medical devices with a same or similar classification in a foreign jurisdiction or any devices intended for implantation in the human body. Should Buyer purchase or use **onsemi** products for any such unintended or unauthorized application, Buyer shall indemnify and hold **onsemi** and its officers, employees, subsidiaries, affiliates, and distributors harmless against all claims, costs, damages, and expenses, and reasonable attorney fees arising out of, directly or indirectly, any claim of personal injury or death associated with such unintended or unauthorized use, even if such claim alleges that **onsemi** was negligent regarding the design or manufacture of the part. **onsemi** is an Equal Opportunity/Affirmative Action Employer. This literature is subject to all applicable copyright laws and is not for resale in any manner.

ADDITIONAL INFORMATION

TECHNICAL PUBLICATIONS:
Technical Library: www.onsemi.com/design/resources/technical−documentation
onsemi Website: www.onsemi.com

ONLINE SUPPORT: www.onsemi.com/support
For additional information, please contact your local Sales Representative at
www.onsemi.com/support/sales