NLAS3799B, NLAS3799BL

Dual DPDT Ultra-Low R_{ON} Switch

The NLAS3799B is an ultra−low R_{ON} dual DPDT and a 0.5 Ω R_{ON} analog switch. This device is designed for low operating voltage, high current switching of speaker output and earpiece for cellphone applications. It can switch a balanced stereo output. The NLAS3799B can handle a balanced microphone/speaker/ring−tone generator in a monophone mode. The device contains a break−before−make (BBM) feature.

Features

- Single Supply Operation
  - 1.65 to 4.5 V V_{CC}
  - Function Directly from LiON Battery
- Maximum Breakdown Voltage: 5.5 V
- Low Static Power
- NLAS3799B Interfaces with 2.8 V Chipset
  NLAS3799BL Interfaces with 1.8 V Chipset
- These are Pb−Free Devices

Typical Applications

- Cell Phone Speaker/Microphone Switching
- Ringtone−Chip/Amplifier Switching
- Four Unbalanced (Single−Ended) Switches
- Stereo Balanced (Push−Pull) Switching

Important Information

- ESD Protection:
  - Human Body Model (HBM) > 8000 V
  - Machine Model (MM) > 400 V
- Continuous Current Rating Through each Switch ±300 mA
- Conforms to: JEDEC MO−220, Issue H, Variation VEED−6
- Package:
  - 1.8 x 2.6 x 0.75 mm WQFN−16 Pb−Free
  - 1.8 x 2.6 x 0.55 mm UQFN−16 Pb−Free

ON Semiconductor®

http://onsemi.com

MARKING DIAGRAMS

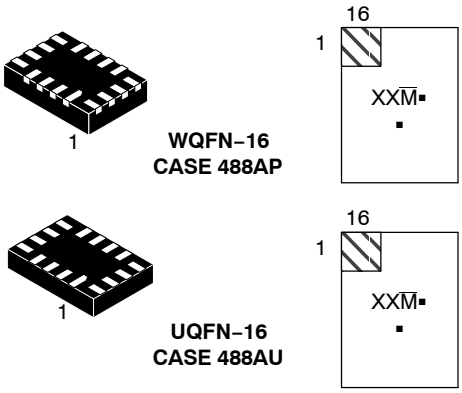

XX = Specific Device Code
AK = NLAS3799BMNR2G
AL = NLAS3799BLMNR2G
AX = NLAS3799BMUR2G
M = Date Code/Assembly Location
▪ = Pb−Free Package
(Note: Microdot may be in either location)

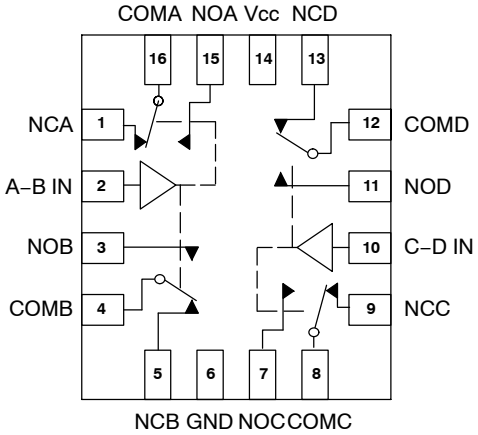

ORDERING INFORMATION

See detailed ordering and shipping information in the package dimensions section on page 10 of this data sheet.

© Semiconductor Components Industries, LLC, 2008

July, 2008 − Rev. 3
Publication Order Number:
NLAS3799B/D

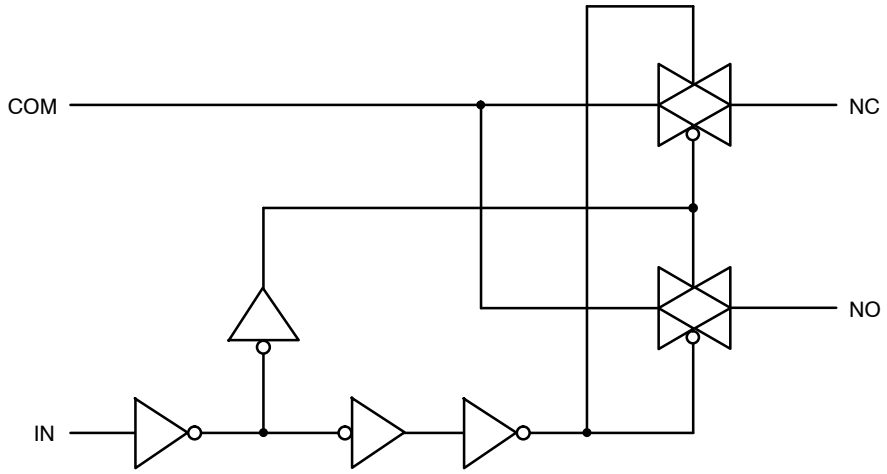

Figure 1. Input Equivalent Circuit

PIN DESCRIPTION

QFN PIN #	Symbol	Name and Function
1, 3, 5, 7, 9, 11, 13, 15	NO A−D, NC A−D	Independent Channels
2, 10	A−B IN, C−D IN	Controls
4, 8, 12, 16	COM A−D	Common Channels
6	GND	Ground (V)
14	V_{CC}	Positive Supply Voltage

TRUTH TABLE

IN	NO	NC
H	ON	OFF*
L	OFF*	ON

*High impedance.

MAXIMUM RATINGS

Symbol	Parameter	Value	Unit
V_{CC}	Positive DC Supply Voltage	−0.5 to +5.5	V
V_{IS}	Analog Input Voltage (V_{NO}, V_{NC}, or V_{COM})	$-0.5 \leq V_{IS} \leq V_{CC} + 0.5$	V
V_{IN}	Digital Select Input Voltage	$-0.5 \leq V_{IN} \leq +V_{CC}$	V
I_{anl1}	Continuous DC Current from COM to NC/NO	±300	mA
$I_{anl-pk1}$	Peak Current from COM to NC/NO, 10 Duty Cycle (Note 1)	±500	mA
I_{clmp}	Continuous DC Current into COM/NO/NC with Respect to V_{CC} or GND	±100	mA

Stresses exceeding Maximum Ratings may damage the device. Maximum Ratings are stress ratings only. Functional operation above the Recommended Operating Conditions is not implied. Extended exposure to stresses above the Recommended Operating Conditions may affect device reliability.

1. Defined as 10% ON, 90% OFF Duty Cycle.

RECOMMENDED OPERATING CONDITIONS

Symbol	Parameter		Min	Max	Unit
V_{CC}	DC Supply Voltage		1.65	4.5	V
V_{IN}	Digital Select Input Voltage		GND	V_{CC}	V
V_{IS}	Analog Input Voltage (NC, NO, COM)		GND	V_{CC}	V
T_A	Operating Temperature Range		−40	+85	°C
t_r, t_f	Input Rise or Fall Time, IN	V_{CC} = 1.6 V − 2.7 V V_{CC} = 3.0 V − 4.5 V		20 10	ns/V

NLAS3799B DC CHARACTERISTICS – DIGITAL SECTION (Voltages Referenced to GND)

Symbol	Parameter	Condition	V_{CC}	Guaranteed Limit 25°C	Guaranteed Limit –40°C to +85°C	Unit
V_{IH}	Minimum High–Level Input Voltage, Select Inputs		3.0 4.3	1.4 2.0	1.4 2.0	V
V_{IL}	Maximum Low–Level Input Voltage, Select Inputs		3.0 4.3	0.5 0.8	0.5 0.8	V
I_{IN}	Maximum Input Leakage Current, Select Inputs	$V_{IN} = V_{CC}$ or GND	4.3	±0.1	±1.0	μA
I_{OFF}	Power Off Leakage Current	V_{IN} = 4.5 V or GND	0	±0.5	±2.0	μA
I_{CC}	Maximum Quiescent Supply Current (Note 2)	Select and $V_{IS} = V_{CC}$ or GND	1.65 to 4.5	±1.0	±2.0	μA

2. Guaranteed by design. Resistance measurements do not include test circuit or package resistance.

NLAS3799B DC ELECTRICAL CHARACTERISTICS – ANALOG SECTION

Symbol	Parameter	Condition	V_{CC}	Guaranteed Maximum Limit 25°C Min	Guaranteed Maximum Limit 25°C Max	Guaranteed Maximum Limit –40°C to +85°C Min	Guaranteed Maximum Limit –40°C to +85°C Max	Unit
R_{ON}	NC/NO On–Resistance (Note 3)	$V_{IN} = V_{IL}$ or $V_{IN} = V_{IH}$ V_{IS} = GND to V_{CC} $I_{IN}I$ = 100 mA	3.0 4.3		0.5 0.4		0.6 0.5	Ω
R_{FLAT}	NC/NO On–Resistance Flatness (Notes 3 and 4)	I_{COM} = 100 mA V_{IS} = 0 to V_{CC}	3.0 4.3		0.15 0.15		0.15 0.15	Ω
ΔR_{ON}	On–Resistance Match Between Channels (Notes 3 and 5)	V_{IS} = 1.5 V; I_{COM} = 100 mA V_{IS} = 2.2 V; I_{COM} = 100 mA	3.0 4.3		0.05 0.05		0.05 0.05	Ω
$I_{NC(OFF)}$ $I_{NO(OFF)}$	NC or NO Off Leakage Current (Note 3)	$V_{IN} = V_{IL}$ or V_{IH} V_{NO} or V_{NC} = 0.3 V V_{COM} = 4.0 V	4.3	–10	10	–100	100	nA
$I_{COM(ON)}$	COM ON Leakage Current (Note 3)	$V_{IN} = V_{IL}$ or V_{IH} V_{NO} 0.3 V or 4.0 V with V_{NC} floating or V_{NC} 0.3 V or 4.0 V with V_{NO} floating V_{COM} = 0.3 V or 4.0 V	4.3	–10	10	–100	100	nA

3. Guaranteed by design. Resistance measurements do not include test circuit or package resistance.
4. Flatness is defined as the difference between the maximum and minimum value of On–resistance as measured over the specified analog signal ranges.
5. $\Delta R_{ON} = R_{ON(MAX)} - R_{ON(MIN)}$ between NCn or NOn.

NLAS3799BL DC CHARACTERISTICS – DIGITAL SECTION (Voltages Referenced to GND)

Symbol	Parameter	Condition	V_{CC}	Guaranteed Limit 25°C	Guaranteed Limit –40 to +85°C	Unit
V_{IH}	Minimum High–Level Input Voltage, Select Inputs		3.0 4.3	1.3 1.6	1.3 1.6	V
V_{IL}	Maximum Low–Level Input Voltage, Select Inputs		3.0 4.3	0.5 0.6	0.5 0.6	V
I_{IN}	Maximum Input Leakage Current, Select Inputs	$V_{IN} = V_{CC}$ or GND	4.3	±0.1	±1.0	μA
I_{OFF}	Power Off Leakage Current	V_{IN} = 4.5 V or GND	0	±0.5	±2.0	μA
I_{CC}	Maximum Quiescent Supply Current (Note 6)	Select and $V_{IS} = V_{CC}$ or GND	1.65 to 4.3	±40	±45	μA

6. Guaranteed by design. Resistance measurements do not include test circuit or package resistance.

NLAS3799BL DC ELECTRICAL CHARACTERISTICS – ANALOG SECTION

Symbol	Parameter	Condition	V_{CC}	Guaranteed Maximum Limit 25°C Min	Guaranteed Maximum Limit 25°C Max	Guaranteed Maximum Limit –40°C to +85°C Min	Guaranteed Maximum Limit –40°C to +85°C Max	Unit
R_{ON}	NC/NO On–Resistance (Note 7)	$V_{IN} = V_{IL}$ or $V_{IN} = V_{IH}$ V_{IS} = GND to V_{CC} $I_{IN}I$ = 100 mA	3.0 4.3		0.5 0.4		0.6 0.5	Ω
R_{FLAT}	NC/NO On–Resistance Flatness (Notes 7 and 8)	I_{COM} = 100 mA V_{IS} = 0 to V_{CC}	3.0 4.3		0.15 0.15		0.15 0.15	Ω
ΔR_{ON}	On–Resistance Match Between Channels (Notes 7 and 9)	V_{IS} = 1.5 V; I_{COM} = 100 mA V_{IS} = 2.2 V; I_{COM} = 100 mA	3.0 4.3		0.05 0.05		0.05 0.05	Ω
$I_{NC(OFF)}$ $I_{NO(OFF)}$	NC or NO Off Leakage Current (Note 7)	$V_{IN} = V_{IL}$ or V_{IH} V_{NO} or V_{NC} = 0.3 V V_{COM} = 4.0 V	4.3	–10	10	–100	100	nA
$I_{COM(ON)}$	COM ON Leakage Current (Note 7)	$V_{IN} = V_{IL}$ or V_{IH} V_{NO} 0.3 V or 4.0 V with V_{NC} floating or V_{NC} 0.3 V or 4.0 V with V_{NO} floating V_{COM} = 0.3 V or 4.0 V	4.3	–10	10	–100	100	nA

7. Guaranteed by design. Resistance measurements do not include test circuit or package resistance.
8. Flatness is defined as the difference between the maximum and minimum value of On–resistance as measured over the specified analog signal ranges.
9. $\Delta R_{ON} = R_{ON(MAX)} - R_{ON(MIN)}$ between NC1 and NC2 or between NO1 and NO2.

NLAS3799B/NLAS3799BL AC ELECTRICAL CHARACTERISTICS (Input $t_r = t_f = 3.0$ ns)

Symbol	Parameter	Test Conditions	V_{CC} (V)	V_{IS} (V)	Guaranteed Maximum Limit					Unit
					25°C			−40°C to +85°C		
					Min	Typ*	Max	Min	Max	
t_{ON}	Turn−On Time	$R_L = 50\ \Omega$, $C_L = 35$ pF (Figures 3 and 4)	2.3 – 4.3	1.5			50		60	ns
t_{OFF}	Turn−Off Time	$R_L = 50\ \Omega$, $C_L = 35$ pF (Figures 3 and 4)	2.3 – 4.3	1.5			30		40	ns
t_{BBM}	Minimum Break−Before−Make Time	$V_{IS} = 3.0$ $R_L = 50\ \Omega$, $C_L = 35$ pF (Figure 2)	3.0	1.5	2	15				ns

		Typical @ 25, V_{CC} = 3.6 V	
C_{IN}	Control Pin Input Capacitance	3.0	pF
C_{SN}	SN Port Capacitance	72	pF
C_D	D Port Capacitance When Switch is Enabled	220	pF

*Typical Characteristics are at 25°C.

ADDITIONAL APPLICATION CHARACTERISTICS (Voltages Referenced to GND Unless Noted)

Symbol	Parameter	Condition	V_{CC} (V)	25°C Typical	Unit
BW	Maximum On−Channel −3 dB Bandwidth or Minimum Frequency Response (Figure 9)	V_{IN} centered between V_{CC} and GND (Figure 5)	1.65 – 4.5	19	MHz
V_{ONL}	Maximum Feed−through On Loss	V_{IN} = 0 dBm @ 100 kHz to 50 MHz V_{IN} centered between V_{CC} and GND (Figure 5)	1.65 – 4.5	−0.06	dB
V_{ISO}	Off−Channel Isolation	f = 100 kHz; V_{IS} = 1 V RMS; C_L = 5.0 pF V_{IN} centered between V_{CC} and GND(Figure 5)	1.65 – 4.5	−69	dB
Q	Charge Injection Select Input to Common I/O (Figure 8)	$V_{IN} = V_{CC}$ to GND, $R_{IS} = 0\ \Omega$, $C_L = 1.0$ nF $Q = C_L \times \Delta V_{OUT}$ (Figure 6)	1.65 – 4.5	51	pC
THD	Total Harmonic Distortion THD + Noise (Figure 7)	F_{IS} = 20 Hz to 20 kHz, $R_L = R_{gen} = 600\ \Omega$, $C_L = 50$ pF $V_{IS} = 2\ V_{PP}$	4.3	0.042	%
VCT	Channel−to−Channel Crosstalk (Figure 10)	f = 100 kHz; V_{IS} = 1.0 V RMS, C_L = 5.0 pF, $R_L = 50\ \Omega$ V_{IN} centered between V_{CC} and GND (Figure 5)	1.65 – 4.5	−90	dB

10. Off−Channel Isolation = 20log10 (V_{COM}/V_{NO}), V_{COM} = output, V_{NO} = input to off switch.

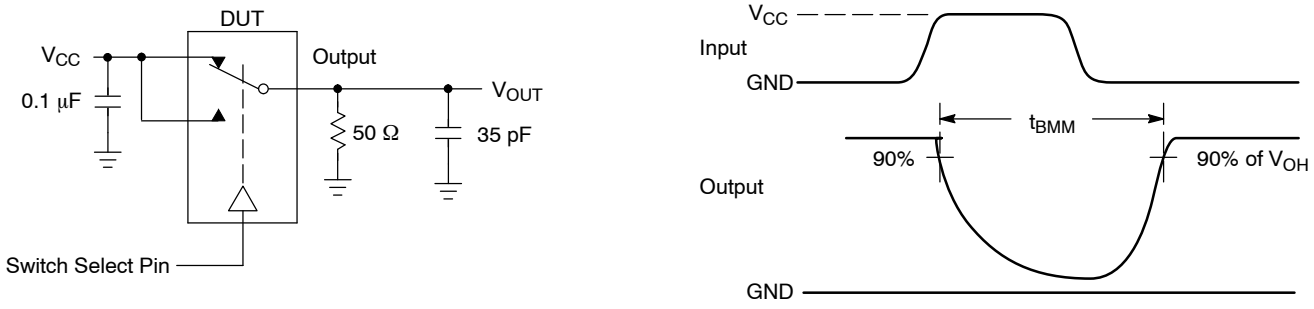

Figure 2. t_{BBM} (Time Break−Before−Make)

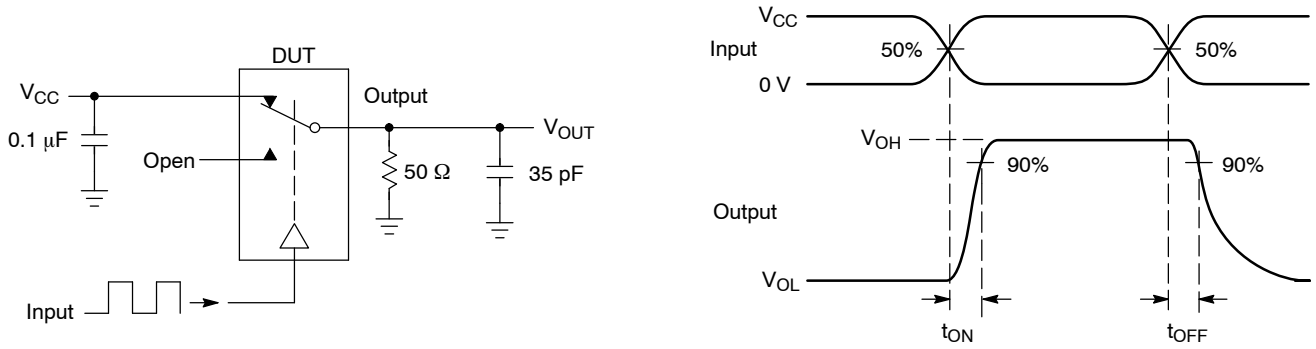

Figure 3. t_{ON}/t_{OFF}

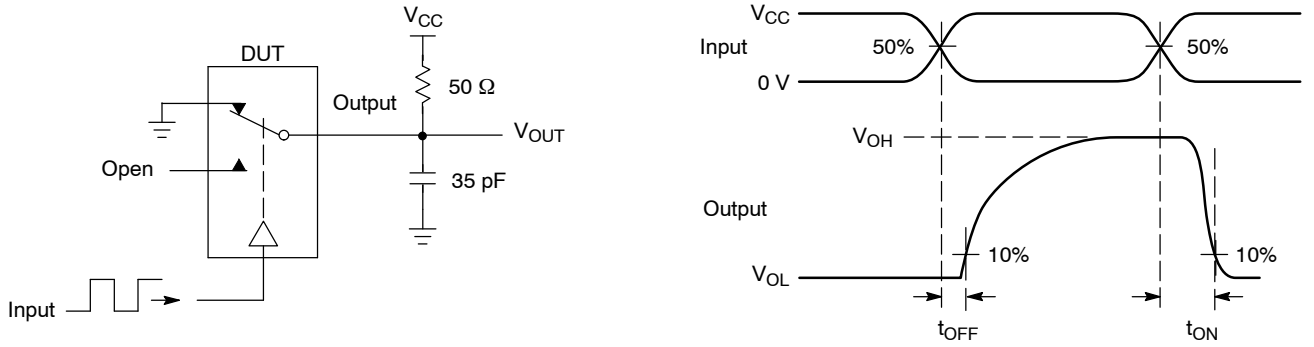

Figure 4. t_{ON}/t_{OFF}

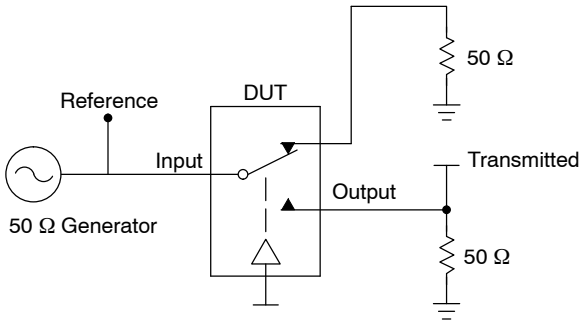

Channel switch control/s test socket is normalized. Off isolation is measured across an off channel. On loss is the bandwidth of an On switch. V_{ISO}, Bandwidth and V_{ONL} are independent of the input signal direction.

V_{ISO} = Off Channel Isolation = 20 Log $\left(\frac{V_{OUT}}{V_{IN}}\right)$ for V_{IN} at 100 kHz

V_{ONL} = On Channel Loss = 20 Log $\left(\frac{V_{OUT}}{V_{IN}}\right)$ for V_{IN} at 100 kHz to 50 MHz

Bandwidth (BW) = the frequency 3 dB below V_{ONL}
V_{CT} = Use V_{ISO} setup and test to all other switch analog input/outputs terminated with 50 Ω

Figure 5. Off Channel Isolation/On Channel Loss (BW)/Crosstalk (On Channel to Off Channel)/V_{ONL}

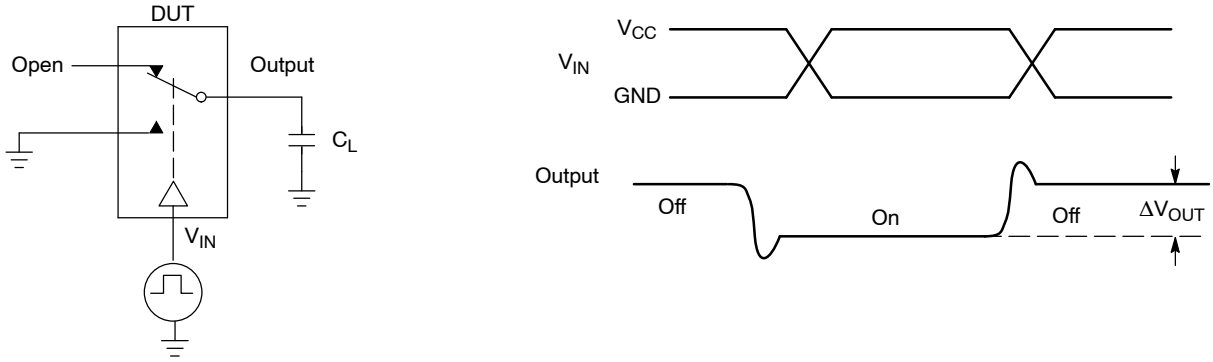

Figure 6. Charge Injection: (Q)

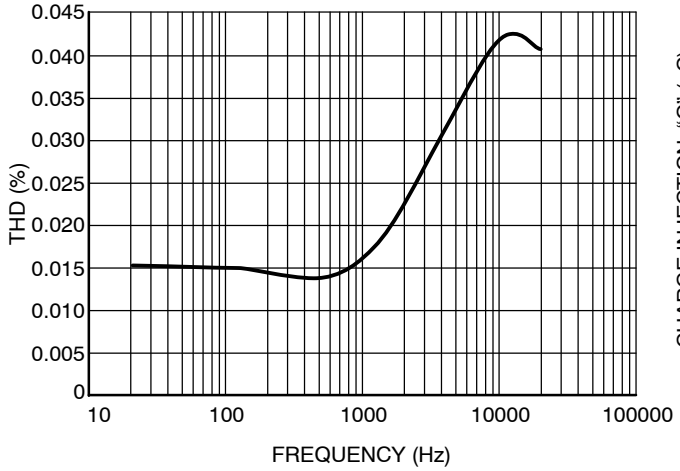

Figure 7. Total Harmonic Distortion vs. Frequency

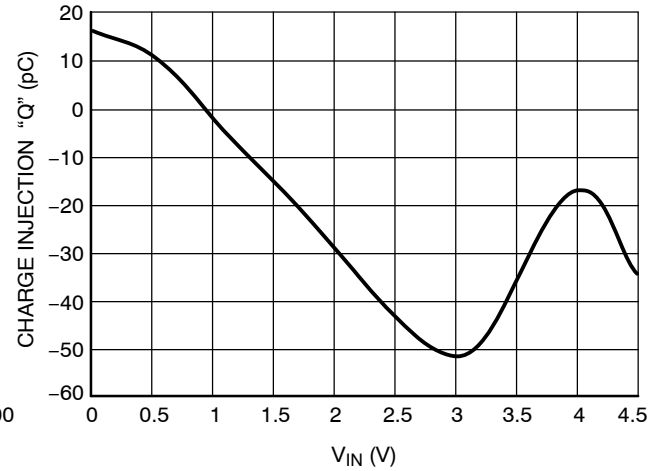

Figure 8. Charge Injection @ 0 V < V_{CC} < 4.5 V

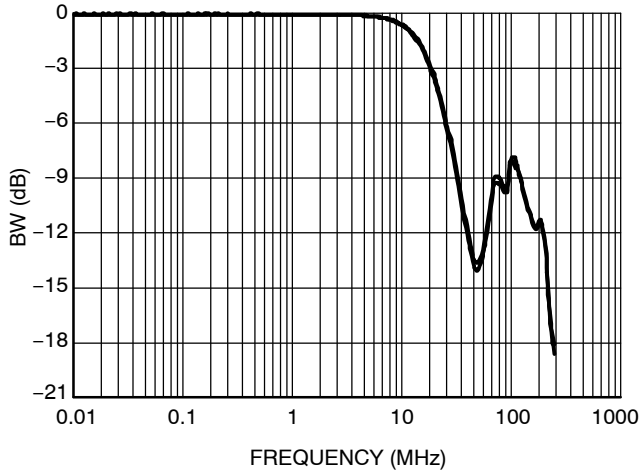

Figure 9. Bandwidth vs. Frequency

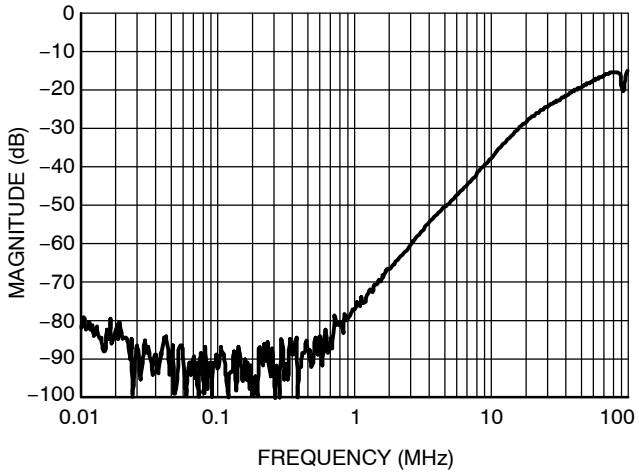

Figure 10. Cross−Talk vs. Frequency

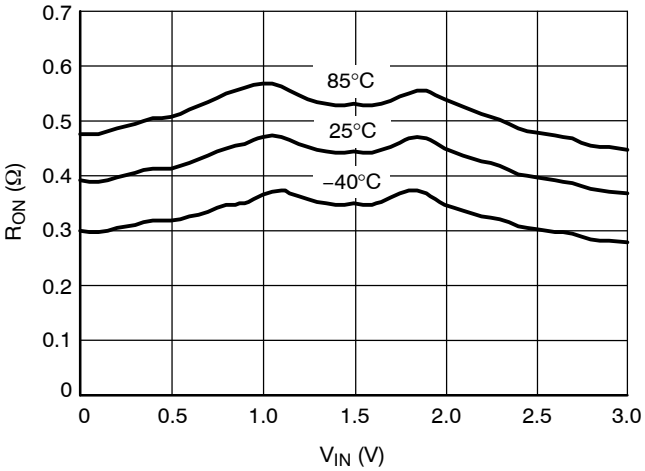

Figure 11. R_{ON} vs. V_{IN} vs. Temperature @ V_{CC} = 3.0 V

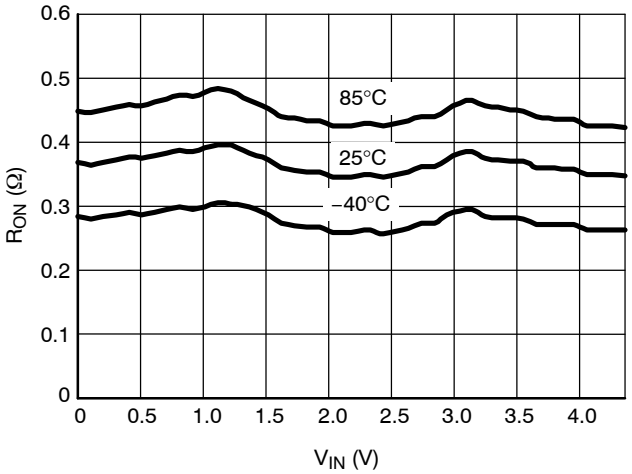

Figure 12. R_{ON} vs. V_{IN} vs. Temperature @ V_{CC} = 4.3 V

DEVICE ORDERING INFORMATION

Device Order Number	Package Type	Tape & Reel Size†
NLAS3799BMNR2G	WQFN−16 (Pb−Free)	3000 / Tape & Reel
NLAS3799BLMNR2G	WQFN−16 (Pb−Free)	3000 / Tape & Reel
NLAS3799BMUR2G	UQFN−16 (Pb−Free)	3000 / Tape & Reel

†For information on tape and reel specifications, including part orientation and tape sizes, please refer to our Tape and Reel Packaging Specifications Brochure, BRD8011/D.

WQFN16, 1.8x2.6, 0.4P
CASE 488AP−01
ISSUE B

DATE 25 JUN 2008

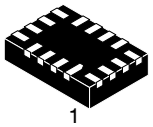

1

SCALE 5:1

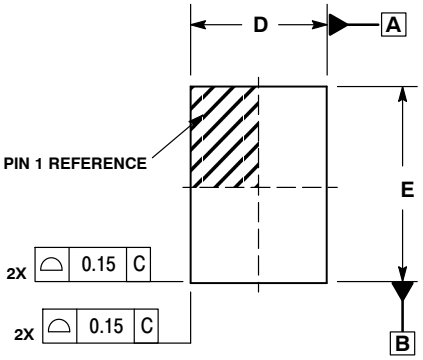

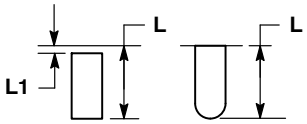

DETAIL A
ALTERNATE TERMINAL CONSTRUCTIONS

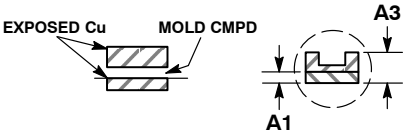

DETAIL B
ALTERNATE CONSTRUCTIONS

NOTES:
1. DIMENSIONING AND TOLERANCING PER ASME Y14.5M, 1994.
2. CONTROLLING DIMENSION: MILLIMETERS
3. DIMENSION b APPLIES TO PLATED TERMINAL AND IS MEASURED BETWEEN 0.25 AND 0.30 MM FROM TERMINAL.
4. COPLANARITY APPLIES TO THE EXPOSED PAD AS WELL AS THE TERMINALS.
5. EXPOSED PADS CONNECTED TO DIE FLAG. USED AS TEST CONTACTS.

	MILLIMETERS	
DIM	MIN	MAX
A	0.70	0.80
A1	0.00	0.050
A3	0.20 REF	
b	0.15	0.25
D	1.80 BSC	
E	2.60 BSC	
e	0.40 BSC	
L	0.30	0.50
L1	0.00	0.15
L2	0.40	0.60

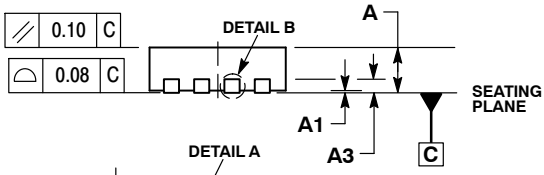

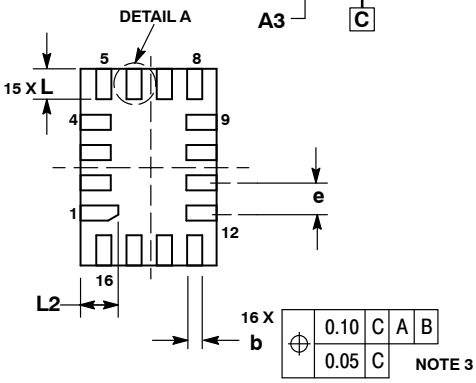

MOUNTING FOOTPRINT

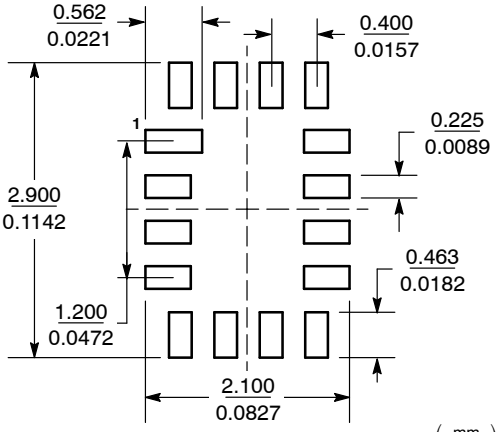

SCALE 20:1 $\left(\frac{\text{mm}}{\text{inches}}\right)$

DOCUMENT NUMBER:	98AON20790D	Electronic versions are uncontrolled except when accessed directly from the Document Repository. Printed versions are uncontrolled except when stamped "CONTROLLED COPY" in red.
DESCRIPTION:	WQFN16, 1.8 X 2.6, 0.4P	PAGE 1 OF 1

ON Semiconductor and ON are trademarks of Semiconductor Components Industries, LLC dba ON Semiconductor or its subsidiaries in the United States and/or other countries. ON Semiconductor reserves the right to make changes without further notice to any products herein. ON Semiconductor makes no warranty, representation or guarantee regarding the suitability of its products for any particular purpose, nor does ON Semiconductor assume any liability arising out of the application or use of any product or circuit, and specifically disclaims any and all liability, including without limitation special, consequential or incidental damages. ON Semiconductor does not convey any license under its patent rights nor the rights of others.

© Semiconductor Components Industries, LLC, 2019

UQFN16 1.8x2.6, 0.4P
CASE 488AU−01
ISSUE A

DATE 01 AUG 2007

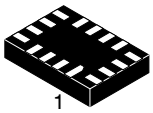

SCALE 5:1

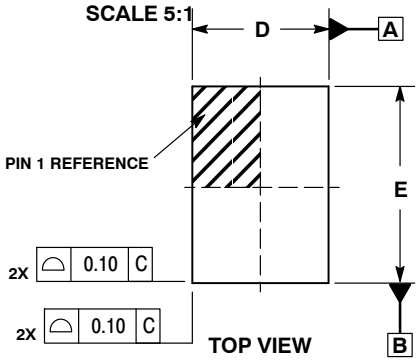

TOP VIEW

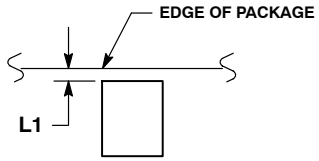

DETAIL A
Bottom View
(Optional)

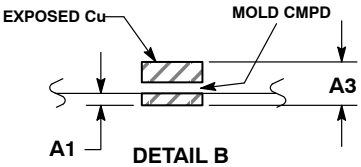

DETAIL B
Side View
(Optional)

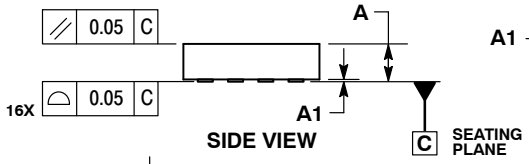

SIDE VIEW

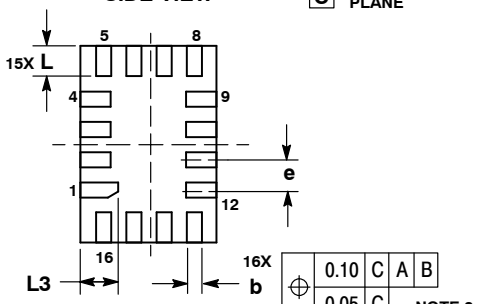

BOTTOM VIEW

NOTES:
1. DIMENSIONING AND TOLERANCING PER ASME Y14.5M, 1994.
2. CONTROLLING DIMENSION: MILLIMETERS
3. DIMENSION b APPLIES TO PLATED TERMINAL AND IS MEASURED BETWEEN 0.25 AND 0.30 MM FROM TERMINAL.
4. COPLANARITY APPLIES TO THE EXPOSED PAD AS WELL AS THE TERMINALS.

DIM	MILLIMETERS MIN	MAX
A	0.45	0.60
A1	0.00	0.05
A3	0.127 REF	
b	0.15	0.25
D	1.80 BSC	
E	2.60 BSC	
e	0.40 BSC	
L	0.30	0.50
L1	0.00	0.15
L3	0.40	0.60

GENERIC MARKING DIAGRAM*

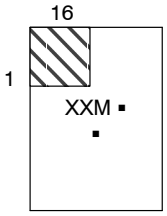

XX = Specific Device Code
M = Date Code/Assembly Location
▪ = Pb−Free Package
(Note: Microdot may be in either location)

*This information is generic. Please refer to device data sheet for actual part marking. Pb−Free indicator, “G”, may or not be present.

MOUNTING FOOTPRINT

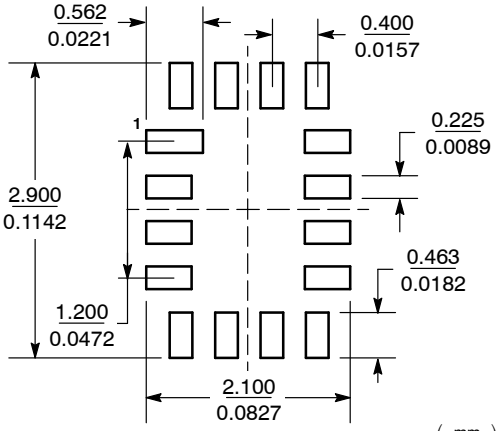

SCALE 20:1 (mm / inches)

DOCUMENT NUMBER:	98AON22494D	Electronic versions are uncontrolled except when accessed directly from the Document Repository. Printed versions are uncontrolled except when stamped “CONTROLLED COPY” in red.
DESCRIPTION:	16 PIN UQFN, 1.8 X 2.6, 0.4P	PAGE 1 OF 1

ON Semiconductor and ON are trademarks of Semiconductor Components Industries, LLC dba ON Semiconductor or its subsidiaries in the United States and/or other countries. ON Semiconductor reserves the right to make changes without further notice to any products herein. ON Semiconductor makes no warranty, representation or guarantee regarding the suitability of its products for any particular purpose, nor does ON Semiconductor assume any liability arising out of the application or use of any product or circuit, and specifically disclaims any and all liability, including without limitation special, consequential or incidental damages. ON Semiconductor does not convey any license under its patent rights nor the rights of others.

© Semiconductor Components Industries, LLC, 2019

onsemi, onsemi, and other names, marks, and brands are registered and/or common law trademarks of Semiconductor Components Industries, LLC dba "**onsemi**" or its affiliates and/or subsidiaries in the United States and/or other countries. **onsemi** owns the rights to a number of patents, trademarks, copyrights, trade secrets, and other intellectual property. A listing of **onsemi**'s product/patent coverage may be accessed at www.onsemi.com/site/pdf/Patent−Marking.pdf. **onsemi** reserves the right to make changes at any time to any products or information herein, without notice. The information herein is provided "as−is" and **onsemi** makes no warranty, representation or guarantee regarding the accuracy of the information, product features, availability, functionality, or suitability of its products for any particular purpose, nor does **onsemi** assume any liability arising out of the application or use of any product or circuit, and specifically disclaims any and all liability, including without limitation special, consequential or incidental damages. Buyer is responsible for its products and applications using **onsemi** products, including compliance with all laws, regulations and safety requirements or standards, regardless of any support or applications information provided by **onsemi**. "Typical" parameters which may be provided in **onsemi** data sheets and/or specifications can and do vary in different applications and actual performance may vary over time. All operating parameters, including "Typicals" must be validated for each customer application by customer's technical experts. **onsemi** does not convey any license under any of its intellectual property rights nor the rights of others. **onsemi** products are not designed, intended, or authorized for use as a critical component in life support systems or any FDA Class 3 medical devices or medical devices with a same or similar classification in a foreign jurisdiction or any devices intended for implantation in the human body. Should Buyer purchase or use **onsemi** products for any such unintended or unauthorized application, Buyer shall indemnify and hold **onsemi** and its officers, employees, subsidiaries, affiliates, and distributors harmless against all claims, costs, damages, and expenses, and reasonable attorney fees arising out of, directly or indirectly, any claim of personal injury or death associated with such unintended or unauthorized use, even if such claim alleges that **onsemi** was negligent regarding the design or manufacture of the part. **onsemi** is an Equal Opportunity/Affirmative Action Employer. This literature is subject to all applicable copyright laws and is not for resale in any manner.

ADDITIONAL INFORMATION

TECHNICAL PUBLICATIONS:
Technical Library: www.onsemi.com/design/resources/technical−documentation
onsemi Website: www.onsemi.com

ONLINE SUPPORT: www.onsemi.com/support
For additional information, please contact your local Sales Representative at
www.onsemi.com/support/sales