NLSV4T244E

4-Bit Dual-Supply Non-Inverting Level Translator

The NLSV4T244E is a 4−bit configurable dual−supply voltage level translator. The input A_n and output B_n ports are designed to track two different power supply rails, V_{CCA} and V_{CCB} respectively. Both supply rails are configurable from 0.9 V to 4.5 V allowing universal low−voltage translation from the input A_n to the output B_n port.

Features

- Wide V_{CCA} and V_{CCB} Operating Range: 0.9 V to 4.5 V
- High−Speed w/ Balanced Propagation Delay
- Inputs and Outputs have OVT Protection to 4.5 V
- Non−preferential V_{CCA} and V_{CCB} Sequencing
- Outputs at 3−State until Active V_{CC} is Reached
- Power−Off Protection
- Outputs Switch to 3−State with V_{CCB} at GND
- Data Rate > 200 Mbps @ V_{CCA} = 1.8 V, V_{CCB} = 3.3 V, R_L = 2 kΩ, C_L = 15 pF
- Ultra−Small Packaging: 1.7 mm x 2.0 mm UQFN12
- These are Pb−Free Devices

Typical Applications

- Mobile Phones, PDAs, Other Portable Devices

Important Information

- ESD Protection for All Pins:
  HBM (Human Body Model) > 2000 V
  MM (Machine Model) > 400 V

DISCONTINUED
THIS DEVICE IS NOT RECOMMENDED FOR NEW DESIGN
PLEASE CONTACT YOUR onsemi
REPRESENTATIVE FOR INFORMATION

ON Semiconductor®

www.onsemi.com

MARKING DIAGRAMS

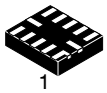

UQFN12
MU SUFFIX
CASE 523AE

AF = Specific Device Code
M = Date Code
▪ = Pb−Free Package
(Note: Microdot may be in either location)

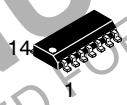

SOIC−14
D SUFFIX
CASE 751A

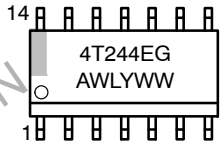

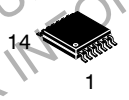

TSSOP−14
DT SUFFIX
CASE 948G

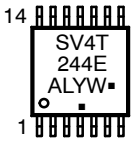

A = Assembly Location
L, WL = Wafer Lot
Y, YY = Year
W, WW = Work Week
G or ▪ = Pb−Free Package
(Note: Microdot may be in either location)

ORDERING INFORMATION

Device	Package	Shipping†
NLSV4T244EMUTAG	UQFN12 (Pb−Free)	3000/Tape & Reel
NLSV4T244EDR2G	SO−14 (Pb−Free)	2500/Tape & Reel
NLSV4T244EDTR2G	TSSOP14 (Pb−Free)	2500/Tape & Reel

†For information on tape and reel specifications, including part orientation and tape sizes, please refer to our Tape and Reel Packaging Specification Brochure, BRD8011/D.

© Semiconductor Components Industries, LLC, 2011

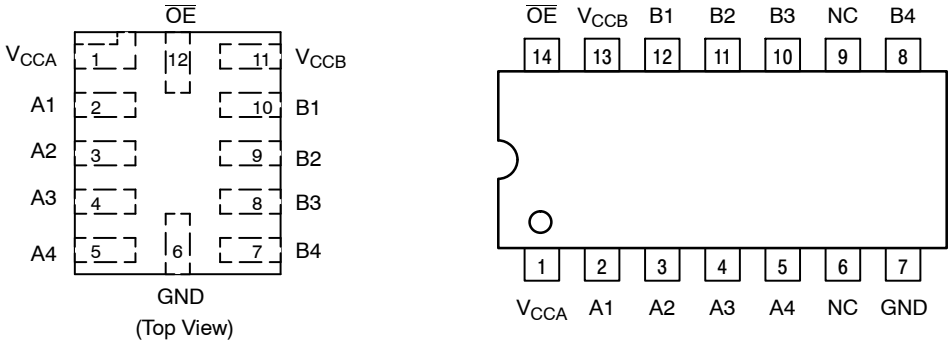

Figure 1. Pin Assignments

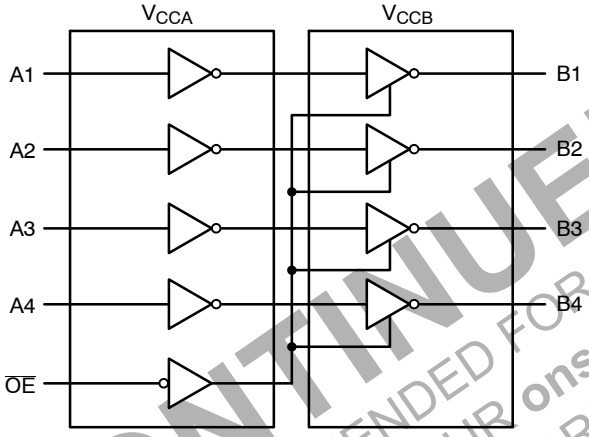

Figure 2. Logic Diagram

DISCONTINUED
THIS DEVICE IS NOT RECOMMENDED FOR NEW DESIGN
PLEASE CONTACT YOUR onsemi
REPRESENTATIVE FOR INFORMATION

PIN ASSIGNMENT

PIN	FUNCTION
V_{CCA}	Input Port DC Power Supply
V_{CCB}	Output Port DC Power Supply
GND	Ground
A_n	Input Port
B_n	Output Port
$\overline{OE}$	Output Enable

TRUTH TABLE

Inputs		Outputs
$\overline{OE}$	A_n	B_n
L	L	L
L	H	H
H	X	3−State

MAXIMUM RATINGS

Symbol	Rating		Condition	Value	Unit
V_{CCA}, V_{CCB}	DC Supply Voltage			−0.5 to +5.5	V
V_I	DC Input Voltage	A_n		−0.5 to +5.5	V
V_C	Control Input	$\overline{OE}$		−0.5 to +5.5	V
V_O	DC Output Voltage (Power Down)	B_n	$V_{CCA} = V_{CCB} = 0$	−0.5 to +5.5	V
	(Active Mode)	B_n		−0.5 to +5.5	V
	(Tri−State Mode)	B_n		−0.5 to +5.5	V
I_{IK}	DC Input Diode Current		V_I < GND	−20	mA
I_{OK}	DC Output Diode Current		V_O < GND	−50	mA
I_O	DC Output Source/Sink Current			±50	mA
I_{CCA}, I_{CCB}	DC Supply Current Per Supply Pin			±100	mA
I_{GND}	DC Ground Current per Ground Pin			±100	mA
T_{STG}	Storage Temperature Range			−65 to +150	°C
T_J	Junction Temperature			+125	°C
θ_{JA}	Junction−to−Ambient Thermal Resistance			53	°C/W
$\Psi_{JC(top)}$	Junction−to−Case (Top) Thermal Resistance			10	°C/W

Stresses exceeding those listed in the Maximum Ratings table may damage the device. If any of these limits are exceeded, device functionality should not be assumed, damage may occur and reliability may be affected.

RECOMMENDED OPERATING CONDITIONS

Symbol	Parameter		Min	Max	Unit
V_{CCA}, V_{CCB}	Positive DC Supply Voltage		0.9	4.5	V
V_I	Bus Input Voltage		GND	4.5	V
V_C	Control Input	$\overline{OE}$	GND	4.5	V
V_{IO}	Bus Output Voltage (Power Down Mode)	B_n	GND	4.5	V
	(Active Mode)	B_n	GND	V_{CCB}	V
	(Tri−State Mode)	B_n	GND	4.5	V
T_A	Operating Temperature Range		−40	+85	°C
$\Delta t / \Delta V$	Input Transition Rise or Rate V_I, from 30% to 70% of V_{CC}; V_{CC} = 3.3 V ±0.3 V		0	10	nS

Functional operation above the stresses listed in the Recommended Operating Ranges is not implied. Extended exposure to stresses beyond the Recommended Operating Ranges limits may affect device reliability.

DISCONTINUED
THIS DEVICE IS NOT RECOMMENDED FOR NEW DESIGN
PLEASE CONTACT YOUR onsemi
REPRESENTATIVE FOR INFORMATION

DC ELECTRICAL CHARACTERISTICS

Symbol	Parameter	Test Conditions	V_{CCA} (V)	V_{CCB} (V)	−40°C to +85°C Min	−40°C to +85°C Max	Unit
V_{IH}	Input HIGH Voltage (An, $\overline{OE}$)		3.6 – 4.5	0.9 – 4.5	2.2	–	V
			2.7 – 3.6		2.0	–	
			2.3 – 2.7		1.6	–	
			1.4 – 2.3		0.65 * V_{CCA}	–	
			0.9 – 1.4		0.9 * V_{CCA}	–	
V_{IL}	Input LOW Voltage (An, $\overline{OE}$)		3.6 – 4.5	0.9 – 4.5	–	0.8	V
			2.7 – 3.6		–	0.8	
			2.3 – 2.7		–	0.7	
			1.4 – 2.3		–	0.35 * V_{CCA}	
			0.9 – 1.4		–	0.1 * V_{CCA}	
V_{OH}	Output HIGH Voltage	I_{OH} = −100 μA; $V_I = V_{IH}$	0.9 – 4.5	0.9 – 4.5	V_{CCB} – 0.2	–	V
		I_{OH} = −0.5 mA; $V_I = V_{IH}$	0.9	0.9	0.75 * V_{CCB}	–	
		I_{OH} = −2 mA; $V_I = V_{IH}$	1.4	1.4	1.05	–	
		I_{OH} = −6 mA; $V_I = V_{IH}$	1.65	1.65	1.25	–	
			2.3	2.3	2.0	–	
		I_{OH} = −12 mA; $V_I = V_{IH}$	2.3	2.3	1.8	–	
			2.7	2.7	2.2	–	
		I_{OH} = −18 mA; $V_I = V_{IH}$	2.3	2.3	1.7	–	
			3.0	3.0	2.4	–	
		I_{OH} = −24 mA; $V_I = V_{IH}$	3.0	3.0	2.2	–	
V_{OL}	Output LOW Voltage	I_{OL} = 100 μA; $V_I = V_{IL}$	0.9 – 4.5	0.9 – 4.5	–	0.2	V
		I_{OL} = 0.5 mA; $V_I = V_{IH}$	1.1	1.1	–	0.3	
		I_{OL} = 2 mA; $V_I = V_{IH}$	1.4	1.4	–	0.35	
		I_{OL} = 6 mA; $V_I = V_{IL}$	1.65	1.65	–	0.3	
		I_{OL} = 12 mA; $V_I = V_{IL}$	2.3	2.3	–	0.4	
			2.7	2.7	–	0.4	
		I_{OL} = 18 mA; $V_I = V_{IL}$	2.3	2.3	–	0.6	
			3.0	3.0	–	0.45	
		I_{OL} = 24 mA; $V_I = V_{IL}$	3.0	3.0	–	0.6	
I_I	Input Leakage Current	$V_I = V_{CCA}$ or GND	0.9 – 4.5	0.9 – 4.5	−1.0	1.0	μA
I_{OFF}	Power−Off Leakage Current	$\overline{OE}$ = 0 V	0 0.9 – 4.5	0.9 – 4.5 0	−1.0 −1.0	1.0 1.0	μA
I_{CCA}	Quiescent Supply Current	$V_I = V_{CCA}$ or GND; I_O = 0, $V_{CCA} = V_{CCB}$	0.9 – 4.5	0.9 – 4.5	–	2.0	μA
I_{CCB}	Quiescent Supply Current	$V_I = V_{CCA}$ or GND; I_O = 0, $V_{CCA} = V_{CCB}$	0.9 – 4.5	0.9 – 4.5	–	2.0	μA
$I_{CCA} + I_{CCB}$	Quiescent Supply Current	$V_I = V_{CCA}$ or GND; I_O = 0, $V_{CCA} = V_{CCB}$	0.9 – 4.5	0.9 – 4.5	–	4.0	μA
ΔI_{CCA}	Increase in I_{CC} per Input Voltage, Other Inputs at V_{CCA} or GND	$V_I = V_{CCA}$ – 0.6 V; $V_I = V_{CCA}$ or GND	4.5 3.6	4.5 3.6	–	10 5.0	μA
ΔI_{CCB}	Increase in I_{CC} per Input Voltage, Other Inputs at V_{CCA} or GND	$V_I = V_{CCA}$ – 0.6 V; $V_I = V_{CCA}$ or GND	4.5 3.6	4.5 3.6	–	10 5.0	μA
I_{OZ}	I/O Tri−State Output Leakage Current	T_A = 25°C, $\overline{OE}$ = 0V_{CCA}, V_O = 0 to V_{CCB} + 0.5 V	0.9 – 4.5	0.9 – 4.5	–	1.0	μA
		T_A = 25°C, $\overline{OE}$ = 0V_{CCA}, V_O = 0 to 4.5 V			–	75	

Product parametric performance is indicated in the Electrical Characteristics for the listed test conditions, unless otherwise noted. Product performance may not be indicated by the Electrical Characteristics if operated under different conditions.

DISCONTINUED
THIS DEVICE IS NOT RECOMMENDED FOR NEW DESIGN
PLEASE CONTACT YOUR onsemi
REPRESENTATIVE FOR INFORMATION

TOTAL STATIC POWER CONSUMPTION (I_{CCA} + I_{CCB})

	−40°C to +85°C										
	V_{CCB} (V)										
	4.5		3.3		2.8		1.8		0.9		
V_{CCA} (V)	Min	Max	Min	Max	Min	Max	Min	Max	Min	Max	Unit
4.5		2		2		2		2		< 1.5	μA
3.3		2		2		2		2		< 1.5	μA
2.8		< 2		< 1		< 1		< 0.5		< 0.5	μA
1.8		< 1		< 1		< 0.5		< 0.5		< 0.5	μA
0.9		< 0.5		< 0.5		< 0.5		< 0.5		< 0.5	μA

NOTE: Connect ground before applying supply voltage V_{CCA} or V_{CCB}. This device is designed with the feature that the power−up sequence of V_{CCA} and V_{CCB} will not damage the IC.

AC ELECTRICAL CHARACTERISTICS

			−40°C to +85°C										
			V_{CCB} (V)										
			4.5		3.3		2.8		1.8		1.5		
Symbol	Parameter	V_{CCA} (V)	Min	Max	Min	Max	Min	Max	Min	Max	Min	Max	Unit
t_{PLH}, t_{PHL} (Note 1)	Propagation Delay, A_n to B_n	4.5		3.0		3.2		3.4		3.7		4.0	nS
		3.6		3.3		3.5		3.7		4.0		4.3	
		2.8		3.5		3.7		3.9		4.2		4.5	
		1.8		3.8		4.0		4.2		4.5		4.8	
		1.5		4.1		4.3		4.5		4.8		5.0	
t_{PZH}, t_{PZL} (Note 1)	Output Enable, $\overline{OE}$ to B_n	4.5		4.4		4.8		5.2		5.7		6.2	nS
		3.3		4.7		5.1		5.5		6.0		6.5	
		2.8		4.9		5.3		5.7		6.2		6.7	
		1.8		5.2		5.6		6.0		6.5		7.0	
		1.5		5.5		5.9		6.3		6.8		7.3	
t_{PHZ}, t_{PLZ} (Note 1)	Output Disable, $\overline{OE}$ to B_n	4.5		4.4		4.8		5.2		5.7		6.2	nS
		3.3		4.7		5.1		5.5		6.0		6.5	
		2.8		4.9		5.3		5.7		6.2		6.7	
		1.8		5.2		5.6		6.0		6.5		7.0	
		1.5		5.5		5.9		6.3		6.8		7.3	
t_{OSHL}, t_{OSLH} (Note 1)	Output to Output Skew, Data to Output	4.1		0.15		0.15		0.15		0.15		0.15	nS
		3.6		0.15		0.15		0.15		0.15		0.15	
		2.8		0.15		0.15		0.15		0.15		0.15	
		1.8		0.15		0.15		0.15		0.15		0.15	
		1.2		0.15		0.15		0.15		0.15		0.15	

1. Propagation delays defined per Figures 3 and 4.

DISCONTINUED
THIS DEVICE IS NOT RECOMMENDED FOR NEW DESIGN
PLEASE CONTACT YOUR onsemi REPRESENTATIVE FOR INFORMATION

CAPACITANCE

Symbol	Parameter	Test Conditions	Typ (Note 2)	Unit
C_{IN}	Control Pin Input Capacitance	V_{CCA} = V_{CCB} = 3.3 V, V_I = 0 V or $V_{CCA/B}$	3.5	pF
$C_{I/O}$	I/O Pin Input Capacitance	V_{CCA} = V_{CCB} = 3.3 V, V_I = 0 V or $V_{CCA/B}$	5.0	pF
C_{PD}	Power Dissipation Capacitance	V_{CCA} = V_{CCB} = 3.3 V, V_I = 0 V or V_{CCA}, f = 10 MHz	20	pF

2. Typical values are at T_A = +25°C.
3. C_{PD} is defined as the value of the IC's equivalent capacitance from which the operating current can be calculated from: $I_{CC(operating)} \cong C_{PD} \times V_{CC} \times f_{IN} \times N_{SW}$ where $I_{CC} = I_{CCA} + I_{CCB}$ and N_{SW} = total number of outputs switching.

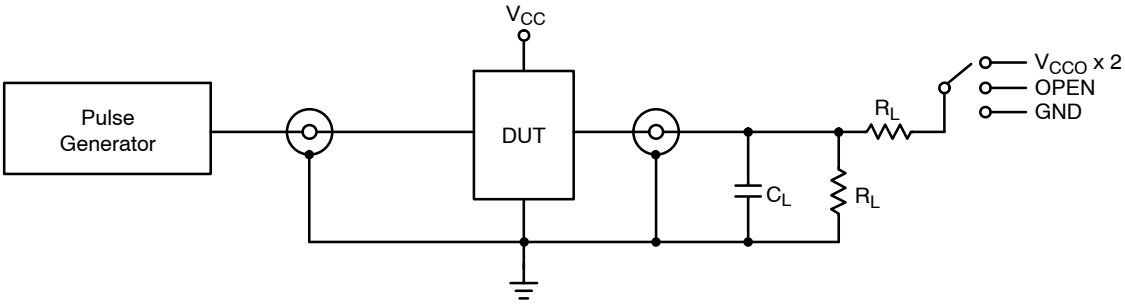

Figure 3. AC (Propagation Delay) Test Circuit

Test	Switch
t_{PLH}, t_{PHL}	OPEN
t_{PLZ}, t_{PZL}	V_{CCO} x 2
t_{PHZ}, t_{PZH}	GND
C_L = 15 pF or equivalent (includes probe and jig capacitance) R_L = 2 kΩ or equivalent Z_{OUT} of pulse generator = 50 Ω	

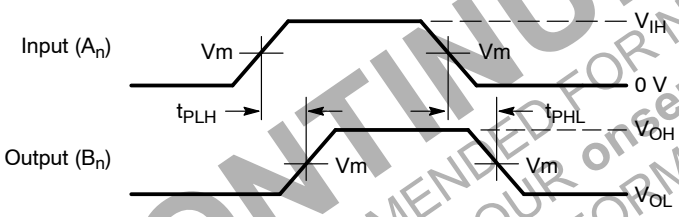

Waveform 1 – Propagation Delays
$t_R = t_F$ = 2.0 ns, 10% to 90%; f = 1 MHz; t_W = 500 ns

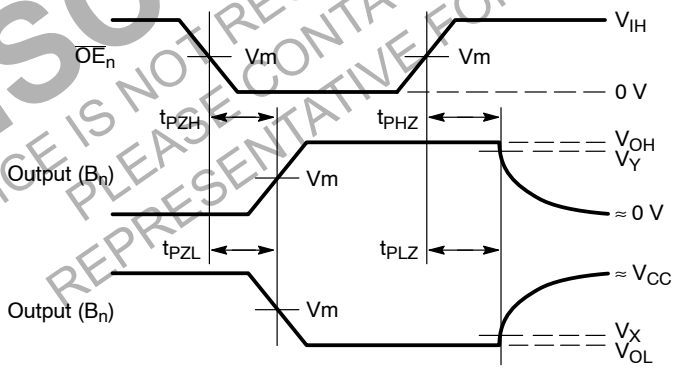

Waveform 2 – Output Enable and Disable Times
$t_R = t_F$ = 2.0 ns, 10% to 90%; f = 1 MHz; t_W = 500 ns

Figure 4. AC (Propagation Delay) Test Circuit Waveforms

Symbol	V_{CC}				
	3.0 V – 4.5 V	2.3 V – 2.7 V	1.65 V – 1.95 V	1.4 V – 1.6 V	0.9 V – 1.3 V
V_{mA}	$V_{CCA}/2$	$V_{CCA}/2$	$V_{CCA}/2$	$V_{CCA}/2$	$V_{CCA}/2$
V_{mB}	$V_{CCB}/2$	$V_{CCB}/2$	$V_{CCB}/2$	$V_{CCB}/2$	$V_{CCB}/2$
V_X	V_{OL} x 0.1	V_{OL} x 0.1	V_{OL} x 0.1	V_{OL} x 0.1	V_{OL} x 0.1
V_Y	V_{OH} x 0.9	V_{OH} x 0.9	V_{OH} x 0.9	V_{OH} x 0.9	V_{OH} x 0.9

DISCONTINUED
THIS DEVICE IS NOT RECOMMENDED FOR NEW DESIGN
PLEASE CONTACT YOUR onsemi
REPRESENTATIVE FOR INFORMATION

UQFN12 1.7x2.0, 0.4P
CASE 523AE
ISSUE A

DATE 11 JUN 2007

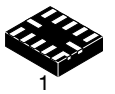

1
SCALE 4:1

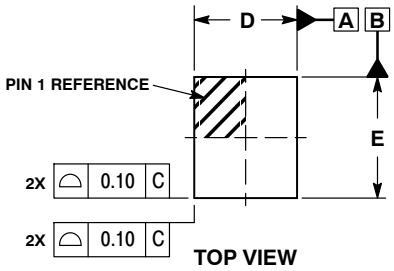

TOP VIEW

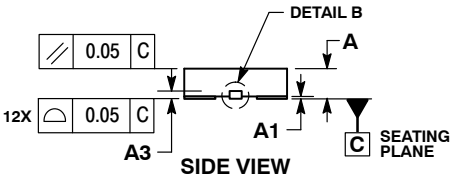

SIDE VIEW

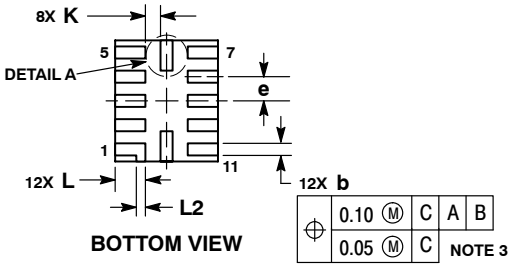

BOTTOM VIEW

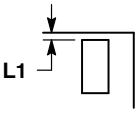

DETAIL A
NOTE 5

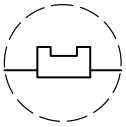

DETAIL B
OPTIONAL CONSTRUCTION

NOTES:
1. DIMENSIONING AND TOLERANCING PER ASME Y14.5M, 1994.
2. CONTROLLING DIMENSION: MILLIMETERS
3. DIMENSION b APPLIES TO PLATED TERMINAL AND IS MEASURED BETWEEN 0.15 AND 0.30 MM FROM TERMINAL TIP.
4. MOLD FLASH ALLOWED ON TERMINALS ALONG EDGE OF PACKAGE. FLASH 0.03 MAX ON BOTTOM SURFACE OF TERMINALS.
5. DETAIL A SHOWS OPTIONAL CONSTRUCTION FOR TERMINALS.

	MILLIMETERS	
DIM	MIN	MAX
A	0.45	0.55
A1	0.00	0.05
A3	0.127 REF	
b	0.15	0.25
D	1.70 BSC	
E	2.00 BSC	
e	0.40 BSC	
K	0.20	----
L	0.45	0.55
L1	0.00	0.03
L2	0.15 REF	

GENERIC MARKING DIAGRAM*

XX = Specific Device Code
M = Date Code
▪ = Pb−Free Package

*This information is generic. Please refer to device data sheet for actual part marking. Pb−Free indicator, “G” or microdot “ ▪”, may or may not be present.

MOUNTING FOOTPRINT SOLDERMASK DEFINED

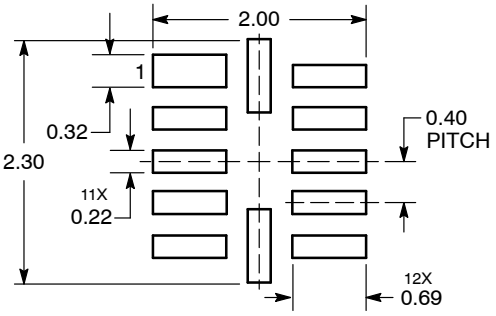

DIMENSIONS: MILLIMETERS

DOCUMENT NUMBER:	98AON23418D	Electronic versions are uncontrolled except when accessed directly from the Document Repository. Printed versions are uncontrolled except when stamped “CONTROLLED COPY” in red.
DESCRIPTION:	UQFN12 1.7 X 2.0, 0.4P	PAGE 1 OF 1

onsemi and onsemi are trademarks of Semiconductor Components Industries, LLC dba **onsemi** or its subsidiaries in the United States and/or other countries. **onsemi** reserves the right to make changes without further notice to any products herein. **onsemi** makes no warranty, representation or guarantee regarding the suitability of its products for any particular purpose, nor does **onsemi** assume any liability arising out of the application or use of any product or circuit, and specifically disclaims any and all liability, including without limitation special, consequential or incidental damages. **onsemi** does not convey any license under its patent rights nor the rights of others.

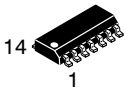

SCALE 1:1

SOIC−14 NB
CASE 751A−03
ISSUE L

DATE 03 FEB 2016

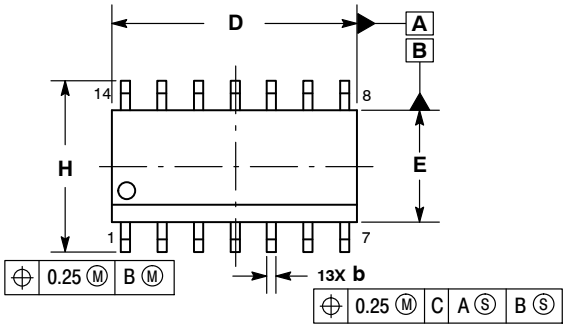

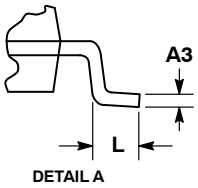

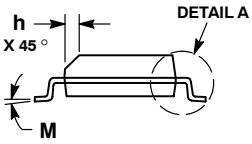

NOTES:
1. DIMENSIONING AND TOLERANCING PER ASME Y14.5M, 1994.
2. CONTROLLING DIMENSION: MILLIMETERS.
3. DIMENSION b DOES NOT INCLUDE DAMBAR PROTRUSION. ALLOWABLE PROTRUSION SHALL BE 0.13 TOTAL IN EXCESS OF AT MAXIMUM MATERIAL CONDITION.
4. DIMENSIONS D AND E DO NOT INCLUDE MOLD PROTRUSIONS.
5. MAXIMUM MOLD PROTRUSION 0.15 PER SIDE.

	MILLIMETERS		INCHES	
DIM	MIN	MAX	MIN	MAX
A	1.35	1.75	0.054	0.068
A1	0.10	0.25	0.004	0.010
A3	0.19	0.25	0.008	0.010
b	0.35	0.49	0.014	0.019
D	8.55	8.75	0.337	0.344
E	3.80	4.00	0.150	0.157
e	1.27 BSC		0.050 BSC	
H	5.80	6.20	0.228	0.244
h	0.25	0.50	0.010	0.019
L	0.40	1.25	0.016	0.049
M	0 °	7 °	0 °	7 °

SOLDERING FOOTPRINT*

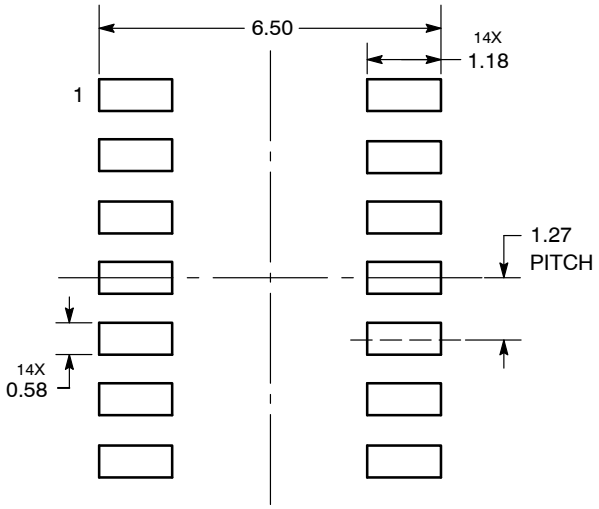

DIMENSIONS: MILLIMETERS

*For additional information on our Pb−Free strategy and soldering details, please download the **onsemi** Soldering and Mounting Techniques Reference Manual, SOLDERRM/D.

GENERIC MARKING DIAGRAM*

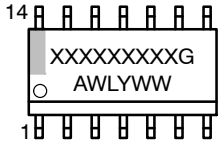

XXXXX	= Specific Device Code
A	= Assembly Location
WL	= Wafer Lot
Y	= Year
WW	= Work Week
G	= Pb−Free Package

*This information is generic. Please refer to device data sheet for actual part marking. Pb−Free indicator, “G” or microdot “▪”, may or may not be present. Some products may not follow the Generic Marking.

STYLES ON PAGE 2

DOCUMENT NUMBER:	98ASB42565B	Electronic versions are uncontrolled except when accessed directly from the Document Repository. Printed versions are uncontrolled except when stamped “CONTROLLED COPY” in red.
DESCRIPTION:	SOIC−14 NB	PAGE 1 OF 2

onsemi and onsemi are trademarks of Semiconductor Components Industries, LLC dba **onsemi** or its subsidiaries in the United States and/or other countries. **onsemi** reserves the right to make changes without further notice to any products herein. **onsemi** makes no warranty, representation or guarantee regarding the suitability of its products for any particular purpose, nor does **onsemi** assume any liability arising out of the application or use of any product or circuit, and specifically disclaims any and all liability, including without limitation special, consequential or incidental damages. **onsemi** does not convey any license under its patent rights nor the rights of others.

SOIC−14
CASE 751A−03
ISSUE L

DATE 03 FEB 2016

STYLE 1:
PIN 1. COMMON CATHODE
2. ANODE/CATHODE
3. ANODE/CATHODE
4. NO CONNECTION
5. ANODE/CATHODE
6. NO CONNECTION
7. ANODE/CATHODE
8. ANODE/CATHODE
9. ANODE/CATHODE
10. NO CONNECTION
11. ANODE/CATHODE
12. ANODE/CATHODE
13. NO CONNECTION
14. COMMON ANODE

STYLE 2:
CANCELLED

STYLE 3:
PIN 1. NO CONNECTION
2. ANODE
3. ANODE
4. NO CONNECTION
5. ANODE
6. NO CONNECTION
7. ANODE
8. ANODE
9. ANODE
10. NO CONNECTION
11. ANODE
12. ANODE
13. NO CONNECTION
14. COMMON CATHODE

STYLE 4:
PIN 1. NO CONNECTION
2. CATHODE
3. CATHODE
4. NO CONNECTION
5. CATHODE
6. NO CONNECTION
7. CATHODE
8. CATHODE
9. CATHODE
10. NO CONNECTION
11. CATHODE
12. CATHODE
13. NO CONNECTION
14. COMMON ANODE

STYLE 5:
PIN 1. COMMON CATHODE
2. ANODE/CATHODE
3. ANODE/CATHODE
4. ANODE/CATHODE
5. ANODE/CATHODE
6. NO CONNECTION
7. COMMON ANODE
8. COMMON CATHODE
9. ANODE/CATHODE
10. ANODE/CATHODE
11. ANODE/CATHODE
12. ANODE/CATHODE
13. NO CONNECTION
14. COMMON ANODE

STYLE 6:
PIN 1. CATHODE
2. CATHODE
3. CATHODE
4. CATHODE
5. CATHODE
6. CATHODE
7. CATHODE
8. ANODE
9. ANODE
10. ANODE
11. ANODE
12. ANODE
13. ANODE
14. ANODE

STYLE 7:
PIN 1. ANODE/CATHODE
2. COMMON ANODE
3. COMMON CATHODE
4. ANODE/CATHODE
5. ANODE/CATHODE
6. ANODE/CATHODE
7. ANODE/CATHODE
8. ANODE/CATHODE
9. ANODE/CATHODE
10. ANODE/CATHODE
11. COMMON CATHODE
12. COMMON ANODE
13. ANODE/CATHODE
14. ANODE/CATHODE

STYLE 8:
PIN 1. COMMON CATHODE
2. ANODE/CATHODE
3. ANODE/CATHODE
4. NO CONNECTION
5. ANODE/CATHODE
6. ANODE/CATHODE
7. COMMON ANODE
8. COMMON ANODE
9. ANODE/CATHODE
10. ANODE/CATHODE
11. NO CONNECTION
12. ANODE/CATHODE
13. ANODE/CATHODE
14. COMMON CATHODE

onsemi and onsemi are trademarks of Semiconductor Components Industries, LLC dba **onsemi** or its subsidiaries in the United States and/or other countries. **onsemi** reserves the right to make changes without further notice to any products herein. **onsemi** makes no warranty, representation or guarantee regarding the suitability of its products for any particular purpose, nor does **onsemi** assume any liability arising out of the application or use of any product or circuit, and specifically disclaims any and all liability, including without limitation special, consequential or incidental damages. **onsemi** does not convey any license under its patent rights nor the rights of others.

© Semiconductor Components Industries, LLC, 2019

TSSOP−14 WB
CASE 948G
ISSUE C

DATE 17 FEB 2016

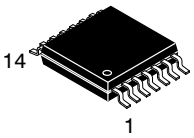

SCALE 2:1

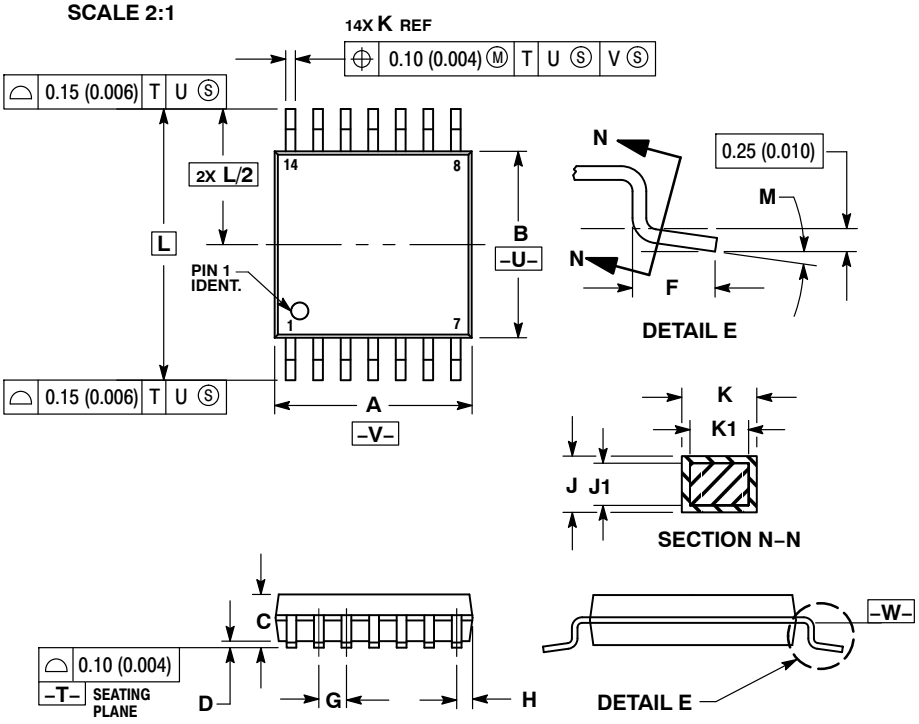

NOTES:
1. DIMENSIONING AND TOLERANCING PER ANSI Y14.5M, 1982.
2. CONTROLLING DIMENSION: MILLIMETER.
3. DIMENSION A DOES NOT INCLUDE MOLD FLASH, PROTRUSIONS OR GATE BURRS. MOLD FLASH OR GATE BURRS SHALL NOT EXCEED 0.15 (0.006) PER SIDE.
4. DIMENSION B DOES NOT INCLUDE INTERLEAD FLASH OR PROTRUSION. INTERLEAD FLASH OR PROTRUSION SHALL NOT EXCEED 0.25 (0.010) PER SIDE.
5. DIMENSION K DOES NOT INCLUDE DAMBAR PROTRUSION. ALLOWABLE DAMBAR PROTRUSION SHALL BE 0.08 (0.003) TOTAL IN EXCESS OF THE K DIMENSION AT MAXIMUM MATERIAL CONDITION.
6. TERMINAL NUMBERS ARE SHOWN FOR REFERENCE ONLY.
7. DIMENSION A AND B ARE TO BE DETERMINED AT DATUM PLANE –W–.

	MILLIMETERS		INCHES	
DIM	MIN	MAX	MIN	MAX
A	4.90	5.10	0.193	0.200
B	4.30	4.50	0.169	0.177
C	–––	1.20	–––	0.047
D	0.05	0.15	0.002	0.006
F	0.50	0.75	0.020	0.030
G	0.65 BSC		0.026 BSC	
H	0.50	0.60	0.020	0.024
J	0.09	0.20	0.004	0.008
J1	0.09	0.16	0.004	0.006
K	0.19	0.30	0.007	0.012
K1	0.19	0.25	0.007	0.010
L	6.40 BSC		0.252 BSC	
M	0 °	8 °	0 °	8 °

RECOMMENDED SOLDERING FOOTPRINT*

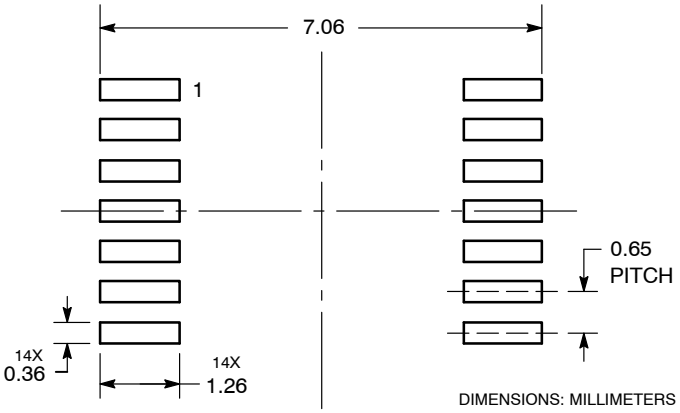

*For additional information on our Pb−Free strategy and soldering details, please download the **onsemi** Soldering and Mounting Techniques Reference Manual, SOLDERRM/D.

GENERIC MARKING DIAGRAM*

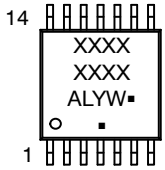

A = Assembly Location
L = Wafer Lot
Y = Year
W = Work Week
▪ = Pb−Free Package

(Note: Microdot may be in either location)

*This information is generic. Please refer to device data sheet for actual part marking. Pb−Free indicator, “G” or microdot “▪”, may or may not be present. Some products may not follow the Generic Marking.

DOCUMENT NUMBER:	98ASH70246A	Electronic versions are uncontrolled except when accessed directly from the Document Repository. Printed versions are uncontrolled except when stamped “CONTROLLED COPY” in red.
DESCRIPTION:	TSSOP−14 WB	PAGE 1 OF 1

onsemi and onsemi are trademarks of Semiconductor Components Industries, LLC dba **onsemi** or its subsidiaries in the United States and/or other countries. **onsemi** reserves the right to make changes without further notice to any products herein. **onsemi** makes no warranty, representation or guarantee regarding the suitability of its products for any particular purpose, nor does **onsemi** assume any liability arising out of the application or use of any product or circuit, and specifically disclaims any and all liability, including without limitation special, consequential or incidental damages. **onsemi** does not convey any license under its patent rights nor the rights of others.

onsemi, onsemi, and other names, marks, and brands are registered and/or common law trademarks of Semiconductor Components Industries, LLC dba "**onsemi**" or its affiliates and/or subsidiaries in the United States and/or other countries. **onsemi** owns the rights to a number of patents, trademarks, copyrights, trade secrets, and other intellectual property. A listing of **onsemi**'s product/patent coverage may be accessed at www.onsemi.com/site/pdf/Patent−Marking.pdf. **onsemi** reserves the right to make changes at any time to any products or information herein, without notice. The information herein is provided "as−is" and **onsemi** makes no warranty, representation or guarantee regarding the accuracy of the information, product features, availability, functionality, or suitability of its products for any particular purpose, nor does **onsemi** assume any liability arising out of the application or use of any product or circuit, and specifically disclaims any and all liability, including without limitation special, consequential or incidental damages. Buyer is responsible for its products and applications using **onsemi** products, including compliance with all laws, regulations and safety requirements or standards, regardless of any support or applications information provided by **onsemi**. "Typical" parameters which may be provided in **onsemi** data sheets and/or specifications can and do vary in different applications and actual performance may vary over time. All operating parameters, including "Typicals" must be validated for each customer application by customer's technical experts. **onsemi** does not convey any license under any of its intellectual property rights nor the rights of others. **onsemi** products are not designed, intended, or authorized for use as a critical component in life support systems or any FDA Class 3 medical devices or medical devices with a same or similar classification in a foreign jurisdiction or any devices intended for implantation in the human body. Should Buyer purchase or use **onsemi** products for any such unintended or unauthorized application, Buyer shall indemnify and hold **onsemi** and its officers, employees, subsidiaries, affiliates, and distributors harmless against all claims, costs, damages, and expenses, and reasonable attorney fees arising out of, directly or indirectly, any claim of personal injury or death associated with such unintended or unauthorized use, even if such claim alleges that **onsemi** was negligent regarding the design or manufacture of the part. **onsemi** is an Equal Opportunity/Affirmative Action Employer. This literature is subject to all applicable copyright laws and is not for resale in any manner.

ADDITIONAL INFORMATION

TECHNICAL PUBLICATIONS:
Technical Library: www.onsemi.com/design/resources/technical−documentation
onsemi Website: www.onsemi.com

ONLINE SUPPORT: www.onsemi.com/support
For additional information, please contact your local Sales Representative at
www.onsemi.com/support/sales