Ultra-Low Power Narrow-Band Sub GHz (60-1050 MHz) RF Transceiver with Integrated +23 dBm High Power Amplifier

ON Semiconductor®

www.onsemi.com

AX5045

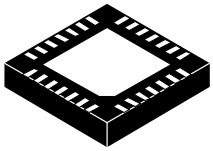

QFN28
CASE 485EH

OVERVIEW

Features

Narrow−Band Sub−GHz RF Transceiver with integrated +23 dBm high power amplifier (PA).

Low−Power

- Receive
  - 15 mA @ 915 MHz FSK, 1 kbps
  - 35 µA, Wake On Radio (WOR), Period of 200 msec
- Transmit
  - 255 mA @ 23 dBm, 915 MHz FSK, 1 kbps
- Standby Currents
  - 121 nA Deep Sleep
  - 640 nA Power Down with Wakeup Timer Running
  - 700 nA Wake On Radio Standby

Supply Voltage Range

- 3.0 V to 3.6 V Single Supply

Transmitter

- Data−rates from 0.1 kbps to 200 kbps (FSK), 50 kbps (ASK), 10 kbps (PSK)
- High Efficiency Integrated Power Amplifier
- Unrestricted and Highly Linear Power Ramp Shaping
- Maximum Output Power
  - 23 dBm @ 915 MHz
- Power Level Programmable in less than 0.5 dB Steps
- GFSK Shaping with BT = 0.3 or BT = 0.5

Receiver

- Data Rates from 0.1 kbps to 200 kbps (FSK), 50 kbps (ASK), 10 kbps (PSK)
- Optional Forward Error Correction (FEC)
- Sensitivity without FEC
  - −132 dBm @ 0.1 kbps, 915 MHz, FSK, combined Rx and Tx match

MARKING DIAGRAM

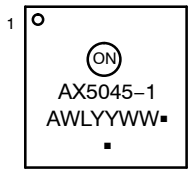

AX5045−1	= Specific Device Code
A	= Assembly Location
WL	= Wafer Lot
YY	= Year
WW	= Work Week
▪	= Pb−Free Package

(Note: Microdot may be in either location)

ORDERING INFORMATION

Device	Package	Shipping
AX5045−1−TW30	QFN28 (Pb−Free)	3000/ Tape & Reel

†For information on tape and reel specifications, including part orientation and tape sizes, please refer to our Tape and Reel Packaging Specifications Brochure, BRD8011/D.

© Semiconductor Components Industries, LLC, 2015

May, 2021 − Rev. 0

Publication Order Number:
AX5045/D

Features (continued)

- 0 dBm Maximum Input Power
- Rx Sensitivity can be improved up to +3 dB by Using an External Tx/Rx Switch
- Or Antenna Diversity can be used with Automatic Switching Control
- Support for External Antenna Switch
- Short Preamble Modes allow the Receiver to work with as little as 16 Preamble Bits

Automatic Gain Control (AGC) and Automatic Frequency Control (AFC)

- AFC up to ±10%

Fast State Switching Times

- 200 μs TX → RX Switching Time
- 62 μs RX → TX Switching Time

Frequency Generation

- Configurable for Usage in 60 – 525 and 700 to 1050 MHz Bands
- RF Carrier Frequency and FSK Deviation Programmable in 1 Hz Steps
- Fully Integrated RF Frequency Synthesizer with VCO Auto−ranging and Band−width Boost Modes for Fast Locking
- Configurable for either Fully Integrated or External Synthesizer Loop Filter for a Large Range of Bandwidths
- Channel Hopping up to 2000 hops/s
- Automatic Frequency Control (AFC)

Wake on Radio (WOR)

- Wake on Radio Dramatically Lowers Power Consumption during Receive Operation
- 640 Hz or 10 kHz Lowest Power Wake−up Timer
- Wake−up Time Interval programmable between 98 μs and 102 s

Sophisticated Radio Controller

- Antenna Diversity and Optional External RX/TX Switch Control
- Fully Automatic Packet Reception and Transmission without Micro−controller Intervention
- Hardware Support for HDLC, Raw, Wireless M−Bus Frames and Arbitrary Defined Frames
- Automatic Channel Noise Level Tracking
- μs Resolution Timestamps for Exact Timing (eg. for Frequency Hopping Systems)
- 256 Byte Micro−programmable FIFO, optionally supports Packet Sizes > 256 Bytes
- Three Matching Units for Preamble Byte, Sync−word and Address
- Ability to store RSSI, Frequency Offset and Data−rate Offset with the Packet Data
- Multiple Receiver Parameter Sets allow the use of more aggressive Receiver Parameters during Preamble, dramatically shortening the Required Preamble Length with no Sensitivity Degradation

Advanced Crystal Oscillator (RF Reference Oscillator)

- Fast Start−up and Lowest Power Steady−state XTAL Oscillator for a Wide Range of Crystals
- Possibility of Applying an External Clock Reference (TCXO)

Miscellaneous Features

- SPI Microcontroller Interface
- Extended Radio Register Set
- Fully Integrated Current/Voltage References
- QFN28 5 mm x 5 mm Package
- Internal Power−on−Reset
- Internal Brown−out Detection
- 12 Bit 0.5 MS/s General Purpose ADC (GPADC)

Applications

60 – 525 and 700 to 1050 MHz Licensed and Unlicensed Radio Systems

- Internet of Things (IoT)
- Smart Retail Including Electronic Shelf Labels (ESL)
- Automatic Meter Reading (AMR)
- Security and Tracking Applications
- Agriculture
- Building Automation
- Wireless Networks
- Target Regulatory Regimes: EN 300 220 including the Narrow−band 12.5 kHz, 20 kHz and 25 kHz Definitions; EN 300 422; FCC Part 15.247; FCC Part 15.249; FCC Part 90 6.25 kHz, 12.5 kHz and 25 kHz

BLOCK DIAGRAM

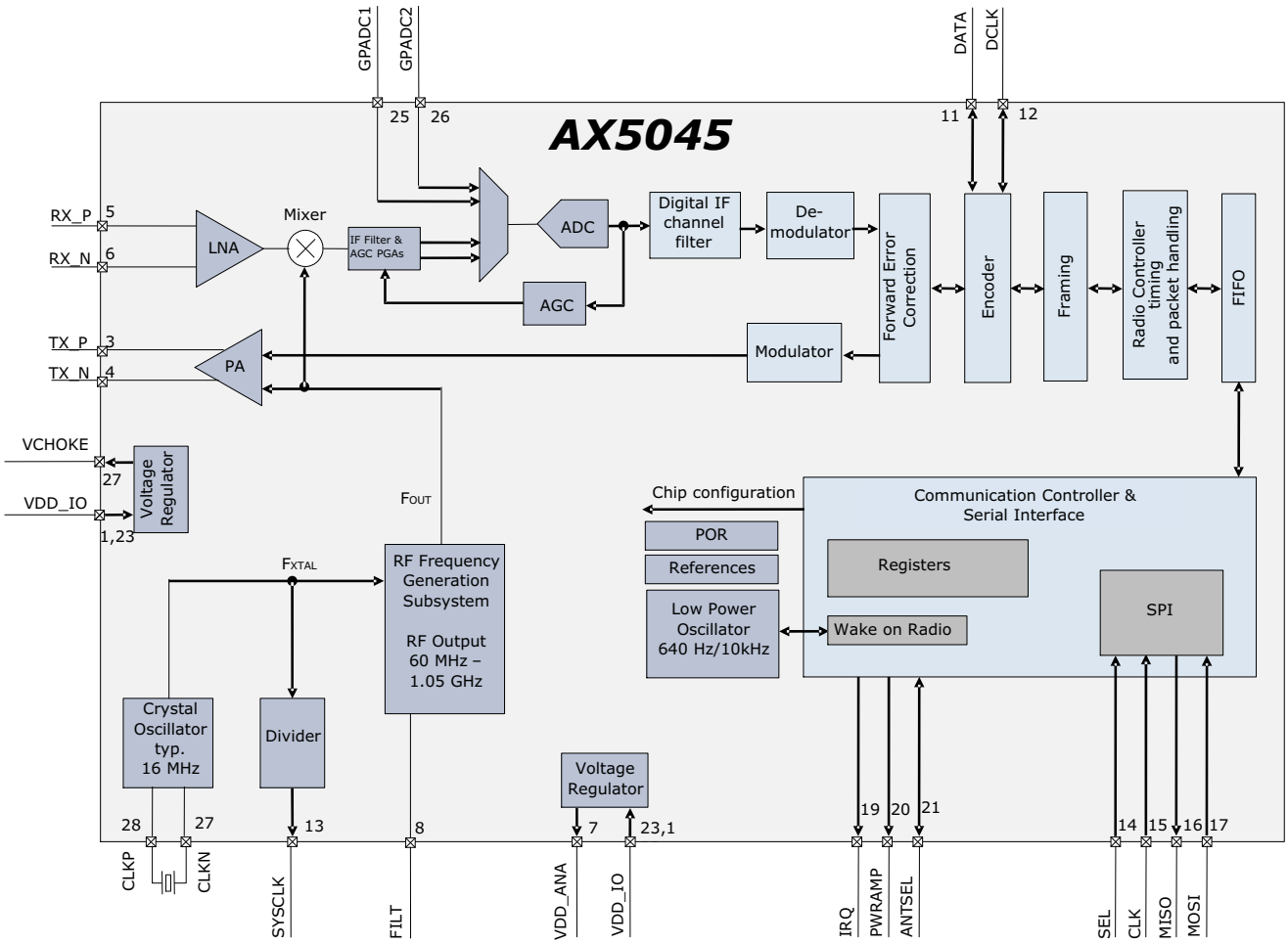

Figure 1. Functional Block Diagram of the AX5045

Table 1. PIN FUNCTION DESCRIPTION

Symbol	Pin(s)	Type	Description
VDD_IO	1	P	Power supply 3.0 V – 3.6 V
VCHOKE	2	P	Regulator Output to External PA choke inductors
TX_P	3	A	Differential TX antenna output
TX_N	4	A	Differential TX antenna output
RX_P	5	A	Differential RX antenna input
RX_N	6	P	Differential RX antenna input
VDD_ANA	7	P	Analog power output, decoupling
FILT	8	A	Optional synthesizer filter
NC	9	A	Not used
NC	10	A	Not used
DATA	11	I/O	In wire mode: Data input/output Can be programmed to be used as a general purpose I/O pin Selectable internal 65 kΩ pull−up resistor
DCLK	12	I/O	In wire mode: Clock output Can be programmed to be used as a general purpose I/O pin Selectable internal 65 kΩ pull−up resistor

Table 1. PIN FUNCTION DESCRIPTION (continued)

Symbol	Pin(s)	Type	Description
SYSCLK	13	I/O	Default functionality: Crystal oscillator (or divided) clock output Can be programmed to be used as a general purpose I/O pin Selectable internal 65 kΩ pull−up resistor
SEL	14	I	Serial peripheral interface select
CLK	15	I	Serial peripheral interface clock
MISO	16	O	Serial peripheral interface data output
MOSI	17	I	Serial peripheral interface data input
NC	18	N	Must be left unconnected
IRQ	19	I/O	Default functionality: Transmit and receive interrupt Can be programmed to be used as a general purpose I/O pin Selectable internal 65 kΩ pull−up resistor
PWRAMP	20	I/O	Default functionality: Power amplifier control output Can be programmed to be used as a general purpose I/O pin Selectable internal 65 kΩ pull−up resistor
ANTSEL	21	I/O	Default functionality: Diversity antenna selection output Can be programmed to be used as a general purpose I/O pin Selectable internal 65 kΩ pull−up resistor
NC	22	N	Must be left unconnected
VDD_IO	23	P	Power supply 3.0 V – 3.6 V
NC	24	N	Must be left unconnected
GPADC1	25	A	GPADC input, must be connected to GND if not used
GPADC2	26	A	GPADC input, must be connected to GND if not used
CLKN	27	A	Crystal oscillator input/output. Leave unconnected when using TCXO
CLKP	28	A	Crystal oscillator input/output. TCXO input.
GND	Center pad	P	Ground on center pad of QFN, must be connected

NOTE: All digital inputs are Schmitt trigger inputs, digital input and output levels are LVCMOS/LVTTL compatible and 5 V tolerant.
A = analog input
I = digital input signal
O = digital output signal
I/O = digital input/output signal
N = not to be connected
P = power or ground

PINOUT DRAWING

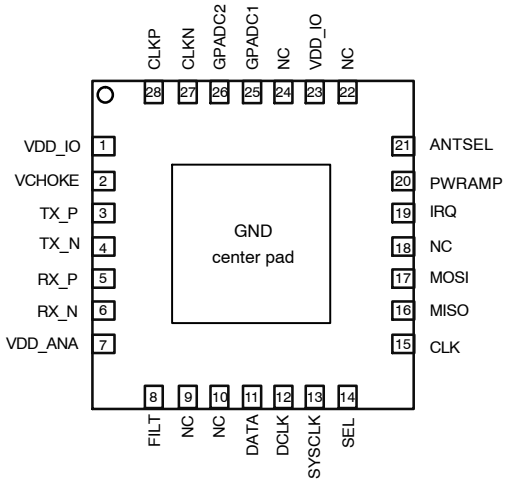

Figure 2. Pinout Drawing (Top View)

Table 2. ABSOLUTE MAXIMUM RATINGS

Symbol	Description	Condition	Min.	Max.	Unit
VDD_IO	Supply voltage		−0.5	5.5	V
IDD	Supply current			300	mA
P_{tot}	Total power consumption			900	mW
P_i	Absolute maximum input power at receiver input	RX_P and RX_N pins in RX mode		10	dBm
I_{I1}	DC current into any pin except TX_P, TX_N, RX_P, RX_N		−10	10	mA
I_{I2}	DC current into pins TX_P, TX_N, RX_P, RX_N		−100	100	mA
I_O	Output Current			40	mA
V_{ia}	Input voltage TX_P, TX_N, RX_P, RX_N pins		−0.5	5.5	V
	Input voltage digital pins		−0.5	5.5	V
V_{esd}	Electrostatic handling	HBM	−2000	2000	V
T_{amb}	Operating temperature		−40	85	°C
T_{stg}	Storage temperature		−65	150	°C
T_j	Junction Temperature			150	°C

Stresses exceeding those listed in the Maximum Ratings table may damage the device. If any of these limits are exceeded, device functionality should not be assumed, damage may occur and reliability may be affected.

1. Exposure to absolute maximum rating conditions for extended periods may affect device reliabiloty.

DC CHARACTERISTICS

Table 3. SUPPLIES

Symbol	Description	Condition	Min.	Typ.	Max.	Unit
T_{AMB}	Operational ambient temperature		−40	27	85	°C
VDD_IO	I/O and voltage regulator supply voltage		3.0	3.3	3.6	V
V_{BOUT}	Brown−out threshold			1.3		V
I_{DSLLEP}	Deep Sleep current: All analog and digital functions are powered down	PWRMODE = 0x01		121		nA
I_{PDOWN}	Power−down current: Register file contents preserved	PWRMODE = 0x00		640		nA
I_{WOR}	Wakeup−on−radio mode: Low power timer and WOR state−machine are running at 640 Hz	PWRMODE = 0x0B		700		nA
I_{STANBY}	Standby−current: All power domains are powered up, crystal oscillator and references are running	PWRMODE = 0x06		960		μA
I_{RX}	Current consumption RX PWRMODE = 0x09 RF Frequency Subsystem: Internal loop−filter	915 MHz, datarate 6 kbps		15		mA
		915 MHz, datarate 100 kbps		16		mA

Table 3. SUPPLIES (continued)

Symbol	Description	Condition	Min.	Typ.	Max.	Unit
I_{TX}	Current consumption TX	915 MHz, 23 dBm, CW, RF Frequency Subsystem: Internal loop−filter (Note 1)		255		mA

1. With combined RX/TX matching network on 915 MHz DVK board at 3 V.

Table 4. LOGIC

Symbol	Description	Condition	Min.	Typ.	Max.	Unit
DIGITAL INPUTS						
VT_+	Schmitt trigger low to high threshold point			1.9		V
VT_-	Schmitt trigger high to low threshold point			1.2		V
V_{IL}	Input voltage, low				0.8	V
V_{IH}	Input voltage, high		2.0			V
I_L	Input leakage current		−10		10	μA
R_{pullup}	Pull−up resistors Pins DATA, DCLK, SYSCLK, IRQ, PWRAMP, ANTSEL	Pull−up enabled in the relevant pin configuration registers		65		kΩ
DIGITAL INPUTS						
I_{OH}	Output Current, high	VDD_IO = 3 V, V_{OH} = 2.4 V	4			mA
I_{OL}	Output Current, low	VDD_IO = 3 V, V_{OL} = 0.4 V	4			mA
I_{OZ}	Tri−state output leakage current		−10		10	μA

AC CHARACTERISTICS

Table 5. CRYSTAL OSCILLATOR

Symbol	Description	Condition	Min.	Typ.	Max.	Unit
f_{XTAL}	Crystal frequency	Note 2, 3, 4	16	48	50	MHz
gm_{maxosc_E}	Oscillator transconductance control range max	Set to 0xE		11		mS
gm_{minosc_1}	Oscillator transconductance control range min	Set to 0x1		1.1		mS
f_{ext}	External clock input (TCXO)	Note 3, 4, 6	10	16	50	MHz
RIN_{osc}	Input DC impedance		10			kΩ
$NDIV_{SYSCLK}$	Divider ratio $f_{SYSCLK} = f_{XTAL}/NDIV_{SYSCLK}$		2^0	2^4	2^{10}	

2. Tolerances and start−up times depend on the crystal used. Depending on the RF frequency and channel spacing the IC must be calibrated to the exact crystal frequency using the readings of the register TRKFREQ.
3. The choice of crystal oscillator or TCXO frequency depends on the targeted regulatory regime for TX, see separate documentation on meeting regulatory requirements.
4. To avoid spurious emission, the crystal or TCXO reference frequency should be chosen so that the RF carrier frequency is not an integer multiple of the crystal or TCXO frequency.
5. The oscillator transconductance is regulated for fastest start−up time during start−up and for lowest power curing steady state oscillation. This means that values depend on the crystal used.
6. Register XTALOSCMODE is used to select either a quartz crystal or TCXO as reference clock. TCXO mode is the default.

Table 6. LOW−POWER OSCILLATOR

Symbol	Description	Condition	Min.	Typ.	Max.	Unit
$f_{osc-slow}$	Oscillator frequency slow mode LPOSC FAST = 0 in AX5043_LPOSCCONFIG register	No calibration	480	640	800	Hz
		After optional software calibration against the crystal oscillator or TCXO, does not include temperature or time drift	630	640	650	
$f_{osc-fast}$	Oscillator frequency fast mode LPOSC FAST = 1 in AX5043_LPOSCCONFIG register	No calibration	7.6	10.2	12.8	kHz
		After optional software calibration against the crystal oscillator or TCXO, does not include temperature or time drift	9.8	10.2	10.8	

Table 7. RF FREQUENCY GENERATION SUBSYSTEM (SYNTHESIZER)

Symbol	Description	Condition	Min.	Typ.	Max.	Unit
f_{REF}	Reference frequency	The reference frequency must be chosen so that the RF carrier frequency is not an integer multiple of the reference frequency	16	48	50	MHz
DIVIDERS						
$NDIV_{ref}$	Reference divider ratio range	Controlled directly with register REFDIV	2^0		2^2	
$NDIV_m$	Main divider ratio range	Controlled indirectly with register FREQ	4.5		66.5	
$NDIV_{RF}$	RF divider range	Controlled directly with register RFDIV	1		12	
CHARGE PUMP						
I_{CPmax}	Charge pump current max			2186		μA
I_{CPmin}	Charge pump current min			8.6		μA
INTERNAL VCO						
f_{RF}	RF frequency range	Depends on divider settings, Excluding 525−699 MHz Band	60		1050	MHz
f_{step}	RF frequency step	RFDIV = 1, f_{xtal} = 48.000000 MHz		0.98		Hz
BW_{max}	Synthesizer loop bandwidth maximum	The synthesizer loop bandwidth and start−up time can be programmed with registers PLLLOOP and PLLCPI. For recommendations see the AX5045 Programming Manual.		350		kHz
BW_{min}	Synthesizer loop bandwidth minimum			50		kHz
T_{start}	Synthesizer start−up time if crystal oscillator and reference are running		5		25	μs
PN915	Synthesizer phase noise 915 MHz f_{REF} = 48 MHz	10 kHz offset from carrier		−90		dBc/Hz
		1 MHz offset from carrier		−125		

Table 8. TRANSMITTER

Symbol	Description	Condition	Min.	Typ.	Max.	Unit
SBR_FSK	Signal bit rate	FSK	0.1		200	kbps
SBR_PSK	Signal bit rate	PSK	0.1		10	kbps
SBR_ASK	Signal bit rate	ASK	0.1		50	kbps
PTX	Max transmitter power @ 915 MHz	50 Ω single ended measurement at an SMA connector behind the matching network (Note 8)		23		dBm
	Min transmitter power @ 915 MHz			−13		
PTX_{step}	Programming step size output power	Note 7			0.5	dB
dTX_{temp}	Transmitter power variation vs. temperature	−40°C to +85°C (Note 8)		±0.5		dB
dTX_{Vdd}	Transmitter power variation vs. VDD_IO	3.0 to 3.6 V (Note 8)		±0.5		dB
Padj	Adjacent channel power GFSK BT = 0.5, 500 Hz deviation, 1.2 kbps, 25 kHz channel spacing, 10 kHz channel BW	915 MHz		−57		dBc
$PTX_{915-harm2}$	Emission @ 2nd harmonic	915 MHz (Note 8)		−50		dBm
$PTX_{915-harm3}$	Emission @ 3rd harmonic			−49		

7. $P_{OUT} = (TXPWRCOEFFB / 2^{12}-1) \times P_{max}$
8. 50 Ω measurement on 915 MHz DVK RF add−on board at 3 V. For recommended matching networks see section: Application Information.

Table 9. RECEIVER SENSITIVITIES

The table lists typical input sensitivities (without FEC) in dBm at the SMA connector with the complete combined RX/TX matching network for BER = 10^{-3} at 915 MHz

Data rate [kbps]		FSK h = 0.66	FSK h = 1	FSK h = 2	FSK h = 4	FSK h = 5	FSK h = 8	FSK h = 16	PSK
0.1	Sensitivity [dBm]	−133.5	−132	−130	−129	−130	−128	−128	−130
	RX Bandwidth [kHz]	0.2	0.2	0.3	0.5	0.6	0.9	2.1	0.2
	Deviation [kHz]	0.033	0.05	0.1	0.2	0.25	0.4	0.8	
1	Sensitivity [dBm]	−124.5	−123	−121	−120	−121.5	−119.5	−117	−127.5
	RX Bandwidth [kHz]	1.5	2	3	6	7	11	21	2
	Deviation [kHz]	0.33	0.5	1	2	2.5	4	8	
10	Sensitivity [dBm]	−114	−113.5	−109.5	−110	−111.5	−108.5	−107	−117.5
	RX Bandwidth [kHz]	15	20	30	55	60	110	220	20
	Deviation [kHz]	3.3	5	10	20	25	40	80	
100	Sensitivity [dBm]	−103.5	−102.5	−101					
	RX Bandwidth [kHz]	185	220	295					
	Deviation [kHz]	33	50	100					
125	Sensitivity [dBm]	−100	−100	−96					
	RX Bandwidth [kHz]	225	250	380					
	Deviation [kHz]	42.3	62.5	125					
200	Sensitivity [dBm]	−98	−97						
	RX Bandwidth [kHz]	333	400						
	Deviation [kHz]	66	100						

9. Sensitivities are equivalent for 1010 data streams and PN9 whitened data streams.

Table 10. RECEIVER

Symbol	Description	Condition	Min.	Typ.	Max.	Unit
SBR_FSK	Signal bit rate	FSK	0.1		200	kbps
SBR_PSK	Signal bit rate	PSK	0.1		10	kbps
SBR_ASK	Signal bit rate	ASK	0.1		50	kbps

Table 10. RECEIVER (continued)

Symbol	Description	Condition	Min.	Typ.	Max.	Unit
IS_{BER915}	Input sensitivity at BER = 10^{-3} for 915 MHz operation, continuous data, without FEC	FSK, h = 0.66, 100 kbps		−102		dBm
		FSK, h = 0.66, 10 kbps		−113		
		FSK, h = 0.66, 1 kbps		−123		
		PSK, 10 kbps		−116		
		PSK, 1 kbps		−124		
$IS_{PER915FEC}$	Input sensitivity at PER = 1%, for 915 MHz operation, packet transmission, with FEC	FSK, h = 0.66, 50 kbps		−105		dBm
		FSK, h = 0.66, 5 kbps		−117		
		FSK, h = 0.66, 0.5 kbps		−127		
IS_{PER915}	Input sensitivity at PER = 1%, for 915 MHz operation, 144 bit packet data, without FEC	FSK, h = 0.66, 100 kbps		−98		dBm
		FSK, h = 0.66, 10 kbps		−111		
		FSK, h = 0.66, 1.2 kbps		−120		
IS_{WOR915}	Input sensitivity at PER = 1% for 915 MHz operation, 144 bit packet data, WOR−mode, without FEC	FSK, h = 0.5, 100 kpbs		−101		dBm
CP_{1dB}	Input referred compression point	2 tones separated by 100 kHz		−32		dBm
$RSSIR_L$	Lower RSSI control range.	Condition = FSK, 500 Hz deviation, 1.2 kbps.		−125		dBm
$RSSIR_U$	Upper RSSI control range.	Condition = FSK, 500 Hz deviation, 1.2 kbps.		−35		dBm
$RSSIS_1$	RSSI step size	Before digital channel filter; calculated from register AGC-COUNTER		0.75		dB
$RSSIS_2$	RSSI step size	Behind digital channel filter; calculated from registers AGC-COUNTER, TRKAMPL		0.1		dB
$RSSIS_3$	RSSI step size	Behind digital channel filter; reading register RSSI		1		dB
SEL_{915}	Adjacent channel suppression	±25 kHz channels (Note 10)		32		dB
		±100 kHz channels (Note 11)		34		
		±200 kHz channels (Note 11)		60		
BLK_{915}	Blocking at offset	+1 MHz (Note 12)		64		dB
		+10 MHz (Note 12)		78		
R_{AFC}	AFC pull−in range	The AFC pull−in range can be programmed with the MAXRFOFFSET registers. The AFC response time can be programmed with the FREQGAIND register. This is a percentage of the RXBW.	15			%
R_{DROFF}	Bitrate offset pull−in range	The bitrate pull−in range can be programmed with the MAXDROFFSET registers. This is a percentage of the RXBW.	10			%

10. Interferer/Channel @ BER = 10^{-3}, channel level is +3 dB above the typical sensitivity, the interfering signal is CW; channel signal is FSK modulated at 1 kbps, modh = 0.66.
11. Interferer/Channel @ BER = 10^{-3}, channel level is +3 dB above the typical sensitivity, the interfering signal is CW; channel signal is FSK modulated at 10 kbps, modh = 0.66.
12. Channel/Blocker @ BER = 10^{-3}, channel level is +3 dB above the typical sensitivity, the blocker signal is CW; channel signal is FSK modulated at 10 kbps, modh = 0.66.

Table 11. RECEIVER AND TRANSMITTER SETTLING TIMES

Symbol	Description	Condition	Min.	Typ.	Max.	Unit
T_{xtal}	XTAL settling time	Powermodes: POWERDOWN to STANDBY Note that T_{xtal} depends on the specific crystal used.		0.5		ms
T_{synth}	Synthesizer settling time	Powermodes: STANDBY to SYNTHTX or SYNTHRX		40		µs
T_{tx}	TX settling time	Powermodes: SYNTHTX to FULLTX T_{tx} is the time used for power ramping, this can be programmed to be 1 x t_{bit}, 2 x t_{bit}, 4 x t_{bit} or 8 x t_{bit}. (Notes 13, 14)	0	1 x t_{bit}	8 x t_{bit}	µs
T_{rx_init}	RX initialization time			150		µs
T_{rx_rssi}	RX RSSI acquisition time (after T_{rx_init})	Powermodes: SYNTHRX to FULLRX Modulation (G)FSK (Notes 13, 14)		80 + 3 x t_{bit}		µs
$T_{rx_preamble}$	RX RSSI acquisition time to valid data RX at full sensitivity/ selectivity (after T_{rx_init})			80 + 3 x t_{bit}		µs

13. t_{bit} depends on the datarate, e.g. fr 10 kbps t_{bit} = 100 µs
14. In wire mode there is a processing delay of typically 6 x t_{bit} between antenna and DCLK/DATA pins.

Table 12. OVERALL STATE TRANSITION TIMES

Symbol	Description	Condition	Min.	Typ.	Max.	Unit
T_{tx_on}	TX startup time	Powermodes: STANDBY to FULLTX (Notes 15, 16)	40	40 + 1 x t_{bit}		µs
T_{rx_on}	RX startup time	Powermodes: STANDBY to FULLRX		190		µs
T_{rx_rssi}	RX startup time to valid RSSI	Powermodes: STANDBY to FULLRX Modulation (G)FSK (Notes 15, 16)		270 + 3 x t_{bit}		µs
T_{rx_data}	RX startup time to valid data at full sensitivity/selectivity			190 + 9 x t_{bit}		µs
T_{rxtx}	RX to TX switching	Powermodes: FULLRX to FULLTX		62		µs
T_{txrx}	TX to RX switching (to preamble start)	Powermodes: FULLTX to FULL-RX		200		
T_{hop}	Frequency hop	Switch between frequency de-fined in register FREQA and FREQB		30		µs

15. t_{bit} depends on the datarate, e.g. fr 10 kbps t_{bit} = 100 µs
16. In wire mode there is a processing delay of typically 6 x t_{bit} between antenna and DCLK/DATA pins.

Table 13. SPI TIMING

Symbol	Description	Condition	Min.	Typ.	Max.	Unit
Tss	SEL falling edge to CLK rising edge		10			ns
Tsh	CLK falling edge to SEL rising edge		10			ns
Tssd	SEL falling edge to MISO driving		0		10	ns
Tssz	SEL rising edge to MISO high−Z		0		10	ns
Ts	MOSI setup time		10			ns
Th	MOSI hold time		10			ns
Tco	CLK falling edge to MISO output				10	ns
Tck	CLK period	(Note 17)	50			ns
Tcl	CLK low duration		15			ns
Tch	CLK high duration		15			ns

17. For SPI access during power−down mode the period should be relaxed to 100 ns
18. For a figure showing the SPI timing parameters see section: Serial Peripheral Interface (SPI).

Table 14. WIRE MODE INTERFACE TIMING

Symbol	Description	Condition	Min.	Typ.	Max.	Unit
Tdck	SEL falling edge to CLK rising edge	Depends on bit rate programming	1.6		10.000	ms
Tdcl	DCLK low duration		25		75	%
Tdch	DCLK high duration		25		75	%
Tds	DATA setup time relative to active DCLK edge		10			ns
Tdh	DATA hold time relative to active DCLK edge		10			ns
Tdco	DATA output change relative to active DCLK edge				10	ns

19. For a figure showing the wire mode interface timing parameters see section: Wire Mode Interface.

Table 15. GENERAL PURPOSE ADC (GPADC)

Symbol	Description	Condition	Min.	Typ.	Max.	Unit
Res	Nominal ADC resolution			12		bit
F_{conv}	Conversion rate		0.03		1	MS/s
DR	Dynamic range			72		dB
INL	Integral nonlinearity		−4		+4	LSB
DNL	Differential nonlinearity		−1	+1.5		LSB
Z_{in}	Input impedance	Single−ended		25		kΩ
V_{DC-IN}	Input DC level			0.8		V
$V_{IN-DIFF}$	Input signal range (differential)		−500		500	mV
V_{IN-SE}	Input signal range (single−ended, signal input at pin GPADC1, pin GPADC2 open)		300		1300	mV

CIRCUIT DESCRIPTION

The AX5045 is a true single chip ultra−low power narrow−band CMOS RF transceiver for use in licensed and unlicensed bands from 60−525 and 700 to 1050 MHz. The on−chip transceiver consists of a fully integrated RF front−end with modulator, and demodulator. Base band data processing is implemented in an advanced and flexible communication controller that enables user friendly communication via the SPI interface.

AX5045 can be operated from a 3.0 V to 3.6 V power supply over a temperature range of −40°C to 85°C. It consumes 255 mA for transmitting at 915 MHz carrier frequency at 23 dBm. In receive operation AX5045 consumes 15 mA at 915 MHz carrier frequency.

AX5045 supports any data rate from 0.1 kbps to 200 kbps for FSK, 4−FSK, GFSK, GMSK, and MSK. ASK supports datarates up to 50 kbps and PSK supports datarates up to 10 kbps. To achieve optimum performance for specific data rates and modulation schemes several register settings to configure the AX5045 are necessary, for details see the AX5045 Programming Manual.

The AX5045 can be operated in two fundamentally different modes.

In **frame mode** data is sent and received via the SPI port in frames. Pre−and post−ambles as well as checksums can be generated automatically. Interrupts can be used to control the data flow between a micro−controller and the AX5045.

In **wire mode** the IC behaves as an extension of any wire. The internal communication controller is disabled and the modem data is directly available on a dedicated pin (DATA). The bit clock is also output on a dedicated pin (DCLK). In this mode the user can connect the data pin to any port of a micro−controller or to a UART, but has to control coding, checksums, pre and post ambles. The user can choose between synchronous and asynchronous wire mode, asynchronous wire mode performs RS232 start bit recognition and re−synchronization for transmit.

Both modes can be used both for transmit and receive. In both cases the AX5045 behaves as a SPI slave interface. Configuration of the AX5045 is always done via the SPI interface.

The receiver and the transmitter support multi−channel operation for all data rates and modulation schemes.

Voltage Regulators

The AX5045 uses an on−chip voltage regulator system to create stable supply voltages for the internal circuitry from the primary supply VDD_IO. The I/O level of the digital pins is VDD_IO.

The AX5045 power amplifier external choke inductors are powered by the regulated VCHOKE pin and not directly tied to the battery. This has the advantage that the current and output power do not vary much over supply voltage and allows for amplitude shaping.

Pins VDD_ANA are supplied for external decoupling of the power supply used for the on−chip PA.

The voltage regulator system must be set into the appropriate state before receive or transmit operations can be initiated. This is handled automatically when programming the device modes via the PWRMODE register.

Register POWSTAT contains status bits that can be read to check if the regulated voltages are ready (bit SVIO) or if VDD_IO has dropped below the brown−out level of 1.3 V (bit SSUM).

In power−down mode the core supply voltages for digital and analog functions are switched off to minimize leakage power. Most register contents are preserved but access to the FIFO is not possible and FIFO contents are lost. SPI access to registers is possible, but at lower speed.

In deep−sleep mode all supply voltages are switched off. All digital and analog functions are disabled. All register contents are lost. To leave deep−sleep mode the pin SEL has to be pulled low. This will initiate startup and reset of the AX5045. Then the MISO line should be polled, as it will be held low during initialization and will rise to high at the end of the initialization, when the chip becomes ready for operation.

Crystal Oscillator and TCXO Interface

The AX5045 is normally operated with an external TCXO, which is required by most narrow−band regulations with a tolerance of 0.5 ppm to 1.5 ppm depending on the regulatory requirements. The on−chip crystal oscillator allows the use of an inexpensive quartz crystal as the RF generation subsystem's timing reference when possible from a regulatory point of view.

A wide range of crystal frequencies can be handled by the crystal oscillator circuit. As the reference frequency impacts both the spectral performance of the transmitter as well as the current consumption of the receiver, the choice of reference frequency should be made according to the regulatory regime targeted by the application.

The crystal or TCXO reference frequency should be chosen so that the RF carrier frequency is not near an integer multiple of the crystal or TCXO frequency.

The oscillator circuit is enabled by programming the PWRMODE register. At power−up it is disabled. By default the oscillator circuit expects a TCXO to be connected to the CLKP pin, while CLKN has to be left unconnected. No special register settings are required.

Alternatively a quartz crystal can be connected. The transconductance of the oscillator is automatically regulated, to allow for fastest start−up times together with lowest power operation during steady−state oscillation.

To synchronize the receiver frequency to a carrier signal, the recommended method to implement frequency

synchronization is to make use of the high resolution RF frequency generation sub−system together with the Automatic Frequency Control.

Low Power Oscillator and Wake−on−Radio (WOR) Mode

The AX5045 features an internal ultra−low power oscillator. In default mode the frequency of oscillation is 640 Hz ±1.5%, in fast mode it is 10.2 kHz ±1.5%. These accuracies are reached after the internal hardware has been used to calibrate the low power oscillator versus the RF reference clock. This procedure can be run in the background during transmit or receive operations.

The low power oscillator makes a WOR mode with a power consumption of 700 nA possible.

If Wake on Radio Mode is enabled, the receiver wakes up periodically at a user selectable interval, and checks for a radio signal on the selected channel. If no signal is detected, the receiver shuts down again. If a radio signal is detected, and a valid packet is received, the microcontroller is alerted by asserting an interrupt.

The AX5045 can thus autonomously poll for radio signals, while the external micro−controller can stay powered down, and only wakes up once a valid packet is received. This allows for very low average receiver power, at the expense of longer preambles at the transmitter.

GPIO Pins

Pins DATA, DCLK,SYSCLK, IRQ, ANTSEL, PWRAMP can be used as general purpose I/O pins by programming pin configuration registers PINFUNCSYSCLK, PINFUNCDCLK, PINFUNCDATA, PINFUNCIRQ, PINFUNCNANTSEL, PINFUNCPWRAMP. Pin input values can be read via register PINSTATE. Pull−ups are disabled if output data is programmed to the GPIO pin.

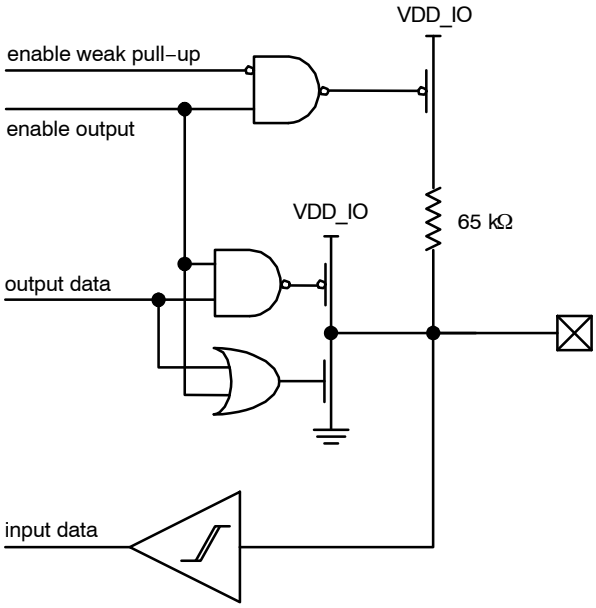

Figure 3. GPIO Pin

SYSCLK Output

The SYSCLK pin outputs either the reference clock signal divided by a programmable power of two or the low power oscillator clock. Division ratios from 1 to 1024 are possible. For divider ratios > 1 the duty cycle is 50%. Bits SYSCLK[4:0] in the PINFUNCSYSCLK register set the divider ratio. By default the SYSCLK output is disabled.

Power−on−Reset (POR)

AX5045 has an integrated power−on−reset block. No external POR circuit is required.

After POR the AX5045 can be reset by first setting the SPI SEL pin to high for at least 100 ns, then setting followed by resetting the bit RST in the PWRMODE register.

After POR or reset all registers are set to their default values.

RF Frequency Generation Subsystem

The RF frequency generation subsystem consists of a fully integrated synthesizer, which multiplies the reference frequency from the crystal oscillator to get the desired RF frequency. The advanced architecture of the synthesizer enables frequency resolutions of 1 Hz, as well as fast settling times of 5 – 50 μs depending on the settings (see section AC Characteristics). Fast settling times mean fast start−up and fast RX/TX switching, which enables low−power system design.

For receive operation the RF frequency is fed to the mixer, for transmit operation to the power−amplifier.

The frequency must be programmed to the desired carrier frequency.

The synthesizer loop bandwidth can be programmed, this serves three purposes:

1. Start−up time optimization, start−up is faster for higher synthesizer loop bandwidths.
2. TX spectrum optimization, phase−noise at 300 kHz to 1 MHz distance from the carrier improves with lower synthesizer loop bandwidths.
3. Adaptation of the bandwidth to the data−rate. For transmission of FSK and MSK it is required that the synthesizer bandwidth must be in the order of the data−rate.

VCO

An on−chip VCO converts the control voltage generated by the charge pump and loop filter into an output frequency. This frequency is used for transmit as well as for receive operation. The frequency can be programmed in 1 Hz steps in the FREQ registers. The RFDIV bits in the PLLVCODIV register must be programmed to the desired frequency band.

The fully integrated VCO allows to operate the device in the frequency range 60 – 525 and 700 – 1050 MHz.

VCO Auto−Ranging

The AX5045 has an integrated auto−ranging function, which allows to set the correct VCO range for specific frequency generation subsystem settings automatically.

Typically it has to be executed after power−up. The function is initiated by setting the RNG_START bit in the PLLRANGINGA or PLLRANGINGB register. The bit is readable and a 0 indicates the end of the ranging process. Setting RNG_START in the PLLRANGINGA register ranges the frequency in FREQA, while setting RNG_START in the PLLRANGINGB register ranges the frequency in FREQB. The RNGERR bit indicates the correct execution of the auto−ranging. The AX5045 can also be configured to compensate for slow, time−varying changes in the optimal range setting.

Loop Filter and Charge Pump

The AX5045 internal loop filter configuration together with the charge pump current sets the synthesizer loop band width. The internal loop−filter has three configurations that can be programmed via the register bits FLT[1:0] in registers PLLLOOP or PLLLOOPBOOST the charge pump current can be programmed using register bits PLLCPI[7:0] in registers PLLCPI or PLLCPIBOOST. Synthesizer bandwidths are typically 50 – 350 kHz depending on the PLLLOOP or PLLLOOPBOOST settings, for details see the section: AC Characteristics.

The AX5045 can be setup in such a way that when the synthesizer is started, the settings in the registers PLLLOOPBOOST and PLLCPIBOOST are applied first for a programmable duration before reverting to the settings in PLLLOOP and PLLCPI. This feature enables automated fastest start−up.

Setting bits FLT[1:0] = 00 bypasses the internal loop filter and the VCO control voltage is output to an external loop filter at pin FILT. This mode of operation is recommended for achieving lower bandwidths than with the internal loop filter.

Registers

See Table 16.

Table 16. RF FREQUENCY GENERATION REGISTERS

Register	Bits	Purpose
PLLLOOP PLLLOOPBOOST	FLT[1:0]	Synthesizer loop filter bandwidth and selection of external loop filter, recommended usage is to increase the bandwidth for faster settling time, bandwidth increases of factor 2 and 5 are possible.
PLLCPI PLLCPIBOOST		Synthesizer charge pump current, recommended usage is to decrease the bandwidth (and improve the phase−noise) for low data−rate transmissions.
PLLVCODIV	REFDIV	Sets the synthesizer reference divider ratio.
	RFDIV	Sets the synthesizer output divider ratio.
FREQA, FREQB		Programming of the carrier frequency.
PLLRANGINGA, PLLRANGINGB		Initiate VCO auto−ranging and check results.

RF Input and Output Stage (RX_N/RX_P/TX_N/TX_P)

RX uses differential pins RX_P and RX_N. TX uses the differential antenna pins TX_P and TX_N. RX/TX switching can be done either with an external RX/TX switch (Figure 10) or with a direct tie configuration (Figure 8).

Pin PWRAMP can be used to control an external RX/TX switch. Pin ANTSEL can be used to control an external antenna switch when receiving with two antennas (Figure 10).

When antenna diversity is enabled, the radio controller will, when not in the middle of receiving a packet, periodically probe both antennas and select the antenna with the highest signal strength. The radio controller can be instructed to periodically write both RSSI values into the FIFO. Antenna diversity mode is fully automatic.

LNA

The LNA amplifies the differential RF signal from the antenna and buffers it to drive the I/Q mixer. An external matching network is used to adapt the antenna impedance to the IC impedance. A DC feed to GND must be provided at the antenna pins (RX_P & RX_N). For recommendations see section: Application Information.

PA

In TX mode the PA drives the signal generated by the frequency generation subsystem out to the differential antenna pins TX_P and TX_N. In register MODCFGA bit TXDIFF must be set high and bit TXSE must be set low.

The output power of the PA is programmed via the register TXPWRCOEFFB.

The PA can be digitally pre−distorted for high linearity.

The output amplitude can be shaped (raised cosine), this mode is selected with bit AMPLSHAPE in register MODCFGA. PA ramping is programmable in increments of the bit time and can be set to 1 – 8 bit times via bits SLOWRAMP in register MODCFGA.

Output power and efficiency, as well as harmonic content will depend on the external impedance seen by the power amplifier (PA). Matching circuit recommendations are given in the section: Application Information.

Digital IF Channel Filter and Demodulator

The digital IF channel filter and the demodulator extract the data bit−stream from the incoming IF signal. They must be programmed to match the modulation scheme as well as the data−rate. Inaccurate programming will lead to loss of sensitivity.

The channel filter offers bandwidths of 119 Hz up to 221 kHz (with reference frequencies above 16 MHz higher bandwidths are possible).

An overview of the registers involved is given in the following Table 17 as reference. The register setups typically must be done once at power−up of the device.

Registers

See Table 17.

Table 17. CHANNEL FILTER AND DEMODULATOR REGISTERS

Register	Remarks
DECIMATION	This register programs the bandwidth of the digital channel filter.
RXDATARATE2… RXDATARATE0	These registers specify the receiver bit rate, relative to the channel filter bandwidth.
MAXDROFFSET2… MAXDROFFSET0	These registers specify the maximum possible data rate offset.
MAXRFOFFSET2… MAXRFOFFSET0	These registers specify the maximum possible RF frequency offset
TIMEGAIN, DRGAIN	These registers specify the aggressiveness of the receiver bit timing recovery. More aggressive settings allow the receiver to synchronize with shorter preambles, at the expense of more timing jitter and thus a higher bit error rate at a given signal−to−noise ratio.
MODULATION	This register selects the modulation to be used by the transmitter and the receiver, i.e. whether ASK, FSK, PSK should be used.
PHASEGAIN, FREQGAINA, FREQGAINB, FREQGAINC, FREQGAIND, AMPLGAIN	These registers control the bandwidth of the phase, frequency offset and amplitude tracking loops.
AGCINCREASE, AGCREDUCE	These register controls the AGC (automatic gain control) loop slopes, and thus the speed of gain adjustments. The faster the bit−rate, the faster the AGC loop should be.
TXRATE	These registers control the bit rate of the transmitter.
FSKDEV	These registers control the frequency deviation of the transmitter in FSK mode. The receiver does not explicitly need to know the frequency deviation, only the channel filter bandwidth has to be set wide enough for the complete modulation to pass.

Encoder

The encoder is located between the Framing Unit, the Demodulator and the Modulator. It can optionally transform the bit−stream in the following ways:

- It can invert the bit stream. In 4−FSK mode, inversion for the LSB and MSB of a DiBit symbol can be set independently.
- It can perform differential encoding. This means that a zero is transmitted as no change in the level, and a one is transmitted as a change in the level.
- It can perform Manchester encoding. Manchester encoding ensures that the modulation has no DC content and enough transitions (changes from 0 to 1 and from 1 to 0) for the demodulator bit timing recovery to function correctly, but does so at a doubling of the data rate.
- It can perform spectral shaping (also known as whitening). Spectral shaping removes DC content of the bit stream, ensures transitions for the demodulator bit timing recovery, and makes sure that the transmitted spectrum does not have discrete lines even if the transmitted data is cyclic. It does so without adding additional bits, i.e. without changing the data rate. Spectral Shaping uses a feedback shift register which can selectively implement the polynomials PN9, PN15 and PN17. Available options are both additive (synchronous) or multiplicative (self−synchronizing) scrambling.

The encoder is programmed using the register ENCODING, details and recommendations on usage are given in the AX5045 Programming Manual.

Framing and FIFO

Most radio systems today group data into packets. The framing unit is responsible for converting these packets into a bit−stream suitable for the modulator, and to extract packets from the continuous bit−stream arriving from the demodulator.

The Framing unit supports two different modes:

- Packet modes
- Raw modes

The micro−controller communicates with the framing unit through a 256 byte FIFO. Data in the FIFO is organized in chunks. The chunk header encodes the length and what data is contained in the payload. Chunks may contain packet data, but also RSSI, Frequency offset, Timestamps, etc.

The AX5045 contains one FIFO. Its direction is switched depending on whether transmit or receive mode is selected.

The FIFO can be operated in polled or interrupt driven modes. In polled mode, the microcontroller must periodically read the FIFO status register or the FIFO count register to determine whether the FIFO needs servicing.

In interrupt mode EMPTY, NOT EMPTY, FULL, NOT FULL and programmable level interrupts are provided. The AX5045 signals interrupts by asserting (driving high) its IRQ line. The interrupt line is level triggered, active high. Interrupts are acknowledged by removing the cause for the interrupt, i.e. by emptying or filling the FIFO.

Basic FIFO status (EMPTY, FULL, Overrun, Underrun, FIFO fill level above threshold, FIFO free space above threshold) are also provided during each SPI access on MISO while the micro−controller shifts out the register address on MOSI. See the SPI interface section for details. This feature significantly reduces the number of SPI accesses necessary during transmit and receive.

Packet Modes

The AX5045 offers different packet modes. For arbitrary packet sizes HDLC is recommended due to its automated flag and bit−stuffing mechanism. The AX5045 also offers packet modes with fixed packet length with up to 12 bits indicating the length of the packet.

In packet modes a cyclic redundancy check (CRC) can be computed automatically.

HDLC Mode is the main framing mode of the AX5045. In this mode, the AX5045 performs automatic packet delimiting, and optional packet correctness check by inserting and checking a CRC field.

NOTE: HDLC mode follows High−Level Data Link Control (HDLC, ISO 13239) protocol.

The packet structure is given in the following Table 18.

Table 18. HDLC PACKET STRUCTURE

Flag	Address	Control	Information	FCS	Flag
8 bit	8 bit	8 or 16 bit	Variable length, 0 or more bits in multiples of 8	16/32 bit	8 bit

20. The end flag of one frame can be used as the start flag of the next frame.

HDLC packets are delimited with flag sequences of content 0x7E.

In AX5045 the meaning of address and control is user defined. The Frame Check Sequence (FCS) can be programmed to be CRC−CCITT, CRC−16 or CRC−32.

The receiver checks the CRC, the result can be retrieved from the FIFO. In HDLC mode the CRC is always appended to the received data.

Another standardized mode supported by AX5045 is Wireless M−Bus, the packet structure is given in the following Table 19.

NOTE: Wireless M−Bus mode follows EN13757−4.

Table 19. WIRELESS M−BUS PACKET STRUCTURE

Preamble	L	C	M	A	FCS	Optional Data Block (optionally repeated with FCS)	FCS
variable	8 bit	8 bit	16 bit	48 bit	16 bit	8 − 96 bit	16 bit

For details on implementing an HDLC communication as well as Wireless M−Bus please see the AX5045 Programming Manual.

Raw Modes

In Raw mode, the AX5045 does not perform any packet delimiting or byte synchronization. It simply serializes transmit bytes and de−serializes the received bit−stream and groups it into bytes. This mode is ideal for implementing legacy protocols in software.

Raw mode with preamble match is similar to raw mode. *In this mode, however, the receiver does not receive anything until it detects a user programmable bit pattern (called the preamble) in the receive bit−stream.* When it detects the preamble, it aligns the de−serialization to it.

AX5045 can search for up to two different preambles. Each preamble can be between 4 and 32 bits long.

RX AGC and RSSI

AX5045 features three receiver signal strength indicators (RSSI):

1. RSSI before the digital IF channel filter.
   The gain of the receiver is adjusted in order to keep the analog IF filter output level inside the working range of the ADC and demodulator.
   The register AGCCOUNTER contains the current value of the AGC and can be used as an RSSI.
   The step size of this RSSI is 0.75 dB. The value can be used as soon as the RF frequency generation sub−system has been programmed.
2. RSSI behind the digital IF channel filter.
   The register RSSI contains the current value of the RSSI behind the digital IF channel filter. The step size of this RSSI is 1 dB. It is possible to set an interrupt getting asserted when the RSSI exceeds or falls below a defined threshold value.
3. RSSI behind the digital IF channel filter – high accuracy.
   The demodulator also provides amplitude information in the TRK_AMPLITUDE register. By combining both the AGCCOUNTER and the TRK_AMPLITUDE registers, a high resolution (better than 0.1 dB) RSSI value can be computed at the expense of a few arithmetic operations on the micro−controller. More details can be found in the AX5045 Programming Manual.

Modulator

Depending on the transmitter settings the modulator generates various inputs for the PA (see Table 20):

Table 20. MODULATIONS

Modulation	Bit = 0	Bit = 1	Main Lobe Bandwidth	Max. Bitrate
ASK	PA off	PA on	BW = BITRATE	50 kBit/s
FSK/MSK/GFSK/GMSK	$\Delta f = -f_{deviation}$	$\Delta f = +f_{deviation}$	BW = (1+h) × BITRATE	200 kBit/s
PSK	$\Delta\phi = 0°$	$\Delta\phi = 180°$	BW = BITRATE	10 kBit/s

NOTE: h = modulation index. It is the ratio of the deviation compared to the bit−rate; $f_{deviation}$ = 0.5VhVBITRATE, AX5045 can demodulate signals with h < 32
ASK = amplitude shift keying
FSK = frequency shift keying
MSK = minimum shift keying; MSK is a special case of FSK, where h = 0.5, and therefore $f_{deviation}$ = 0.25 BITRATE; the advantage of MSK over FSK is that it can be demodulated more robustly
PSK = phase shift keying

All modulation schemes, except 4−FSK, are binary.

Amplitude can be shaped using a raised cosine waveform. Amplitude shaping will also be performed for constant amplitude modulation ((G)FSK, (G)MSK) when ramping up and down the PA. Amplitude shaping should always be enabled.

Frequency shaping can either be hard (FSK, MSK), or Gaussian (GMSK, GFSK), with selectable BT = 0.3 or BT = 0.5.

Table 21. 4−FSK MODULATION

Modulation	DiBit = 00	DiBit = 01	DiBit = 11	DiBit = 10	Main Lobe Bandwidth	Max. Bitrate
4−FSK	$\Delta f = -3f_{deviation}$	$\Delta f = -f_{deviation}$	$\Delta f = +f_{deviation}$	$\Delta f = +3f_{deviation}$	BW = (1 + 3 h) × BITRATE	200 kBit/s

4−FSK Frequency shaping is always hard.

Automatic Frequency Control (AFC)

The AX5045 features an automatic frequency tracking loop which is capable of tracking the transmitter frequency within the RX filter band width. On top of that the AX5045 has a frequency tracking register TRKRFFREQ to synchronize the receiver frequency to a carrier signal. For AFC adjustment, the frequency offset can be computed with the following formula:

$$\Delta f = \frac{\text{TRKRFFREQ}}{2^{24}} \times f_{XTAL} \qquad \text{(eq. 1)}$$

The pull−in range of the AFC can be programmed with the MAXRFOFFSET Registers.

PWRMODE Register

The PWRMODE register controls, which parts of the chip are operating.

Table 22. PWRMODE REGISTER

PWRMODE Register	Name	Description
0000	POWERDOWN	All digital and analog functions, except the register file, are disabled. The core supply voltages are switched off to conserve leakage power. Register contents are preserved and accessible registers via SPI, but at a slower speed. Access to the FIFO is not possible and the contents are not preserved. POWERDOWN mode is only entered once the FIFO is empty.
0001	DEEPSLEEP	AX5045 is fully turned off. All digital and analog functions are disabled. All register contents are lost. To leave DEEPSLEEP mode the pin SEL has to be pulled low. This will initiate startup and reset of the AX5045. Then the MISO line should be polled, as it will be held low during initialization and will rise to high at the end of the initialization, when the chip becomes ready for operation.
0101	STANDBY	The crystal oscillator and the reference are powered on; receiver and transmitter are off. Register contents are preserved and accessible registers via SPI. Access to the FIFO is not possible and the contents are not preserved. STANDBY is only entered once the FIFO is empty
0111	FIFO	The reference is powered on. Register contents are preserved and accessible registers via SPI. Access to the FIFO is possible and the contents are preserved.
1000	SYNTHRX	The synthesizer is running on the receive frequency. Transmitter and receiver are still off. This mode is used to let the synthesizer settle on the correct frequency for receive.
1001	FULLRX	Synthesizer and receiver are running.
1011	WOR	Receiver wakeup−on−radio mode. The mode the same as POWERDOWN, but the 640 Hz internal low power oscillator is running.
1100	SYNTHTX	The synthesizer is running on the transmit frequency. Transmitter and receiver are still off. This mode is used to let the synthesizer settle on the correct frequency for transmit.
1101	FULLTX	Synthesizer and transmitter are running. Do not switch into this mode before the synthesizer has completely settled on the transmit frequency (in SYNTHTX mode), otherwise spurious spectral transmissions will occur.

For the corresponding currents see Table 3.

Table 23. A TYPICAL PWRMODE SEQUENCE FOR A TRANSMIT SESSION

Step	PWRMODE	Remarks
1	POWERDOWN	
2	STANDBY	The settling time is dominated by the crystal used, typical value 3ms.
3	FULLTX	Data transmission.
4	POWERDOWN	

Table 24. A TYPICAL PWRMODE SEQUENCE FOR A RECEIVE SESSION

Step	PWRMODE [3:0]	Remarks
1	POWERDOWN	
2	STANDBY	The settling time is dominated by the crystal used, typical value 3ms.
3	FULLTX	Data reception.
4	POWERDOWN	

Serial Peripheral Interface

The AX5045 can be programmed via a four wire serial interface according SPI using the pins CLK, MOSI, MISO and SEL. Registers for setting up the AX5045 are programmed via the serial peripheral interface in all device modes.

When the interface signal SEL is pulled low, a configuration data stream is expected on the input signal pin MOSI, which is interpreted as D0...Dx, A0...Ax, R_N/W. Data read from the interface appears on MISO.

Figure 4 shows a write/read access to the interface. The data stream is built of an address byte including read/write information and a data byte. Depending on the R_N/W bit and address bits A[6..0], data D[7..0] can be written via MOSI or read at the pin MISO. R_N/W = 0 means read mode, R_N/W = 1 means write mode.

Most registers are 8 bits wide and accessed using the waveforms as detailed in Figure 5. The most important registers are at the beginning of the address space, i.e. at addresses less than 0x70. These registers can be accessed more efficiently using the short address form, which is detailed in Figure 4.

Some registers are longer than 8 bits. These registers can be accessed more quickly than by reading and writing individual 8 bit parts. This is illustrated in Figure 6. Accesses are not limited by 16 bits either, reading and writing data bytes can be continued as long as desired. After each byte, the address counter is incremented by one. This access form works with both, short and long addresses.

During the address phase of the access, the AX5045 outputs the most important status bits. This feature is designed to speed up the software decision on what to do in an interrupt handler.

The status bits contain the following information:

Table 25. SPI STATUS BITS

SPI Bit Cell	Status	Meaning/Register Bit
0	–	1 (when transitioning out of deep sleep mode, this bit transitions from 0 → 1 when the power becomes ready)
1	S14	PLL LOCK
2	S13	FIFO OVER
3	S12	FIFO OVER
4	S11	THRESHOLD FREE (FIFOFREE > FIFOTHRESH)
5	S10	THRESHOLD COUNT (FIFOCOUNT > FIFOTHRESH)
6	S9	FIFO FULL
7	S8	FIFO EMPTY
8	S7	PWRGOOD (not BROWNOUT)
9	S6	PWR INTERRUPT PENDING
10	S5	RADIO EVENT PENDING
11	S4	XTAL OSCILLATOR RUNNING
12	S3	WAKEUP INTERRUPT PENDING
13	S2	LPOSC INTERRUPT PENDING
14	S1	GPADC INTERRUPT PENDING
15	S0	internal

21. Bit cells 8 –15 (S7…S0) are only available in two address byte SPI access formats.

SPI Timing

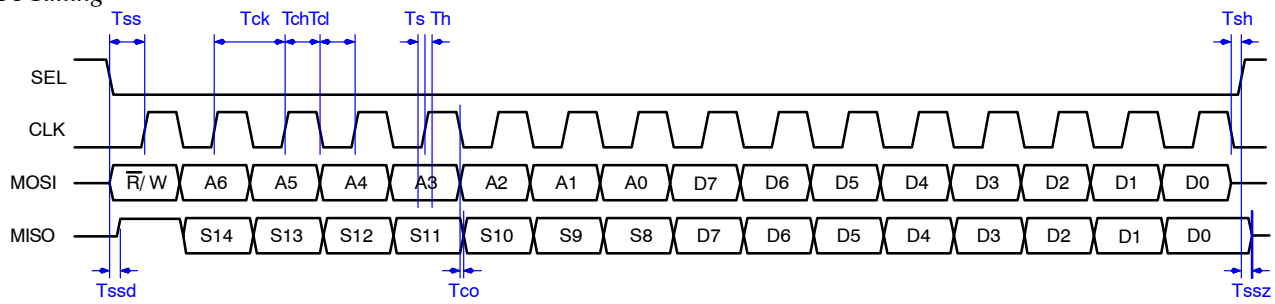

Figure 4. SPI 8 Bit Read/Write Access with Timing

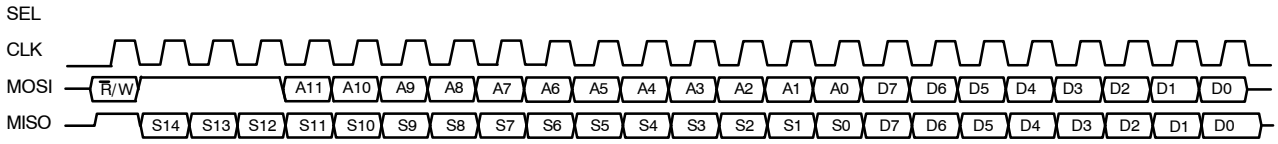

Figure 5. SPI 8 Bit Long Address Read/Write Access

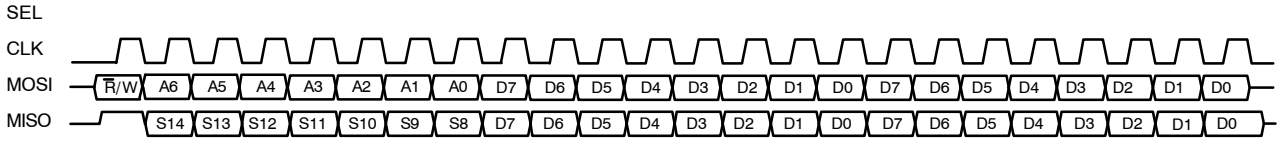

Figure 6. SPI 16 Bit Long Read/Write Access

Wire Mode Interface

In wire mode the transmitted or received data are transferred from and to the AX5045 using the pins DATA and DCLK. DATA is an input when transmitting and an output when receiving.

The direction (i.e. transmit or receive) can be chosen by programming the PWRMODE register.

Wire mode offers two variants: synchronous or asynchronous.

In synchronous wire mode the, the AX5045 always drives DCLK. Transmit data must be applied to DATA synchronously to DCLK, and receive data must be sampled synchronously to DCLK. Timing is given in Figure 7. In asynchronous wire mode, a low voltage RS232 type UART can be connected to DATA. DCLK is optional in this mode. The UART must be programmed to send two stop bits, but must be able to accept only one stop bit. Both the UART data rate and the AX5045 transmit and receive bit rate must match. The AX5045 synchronizes the RS232 signal to its internal transmission clock, by inserting or deleting a stop bit.

Wiremode is also available in 4−FSK mode. The two bits that encode one symbol are serialized on the DATA pin. The PWRAMP pin can be used as a synchronization pin to allow symbol (dibit) boundaries to be reconstructed. Gray coding is used to reduce the number of bit errors in case of a wrong decision. Details can be found in the AX5045 Programming Manual.

Registers for setting up the AX5045 are programmed via the serial peripheral interface (SPI).

Wire Mode Timing

See Figure 7.

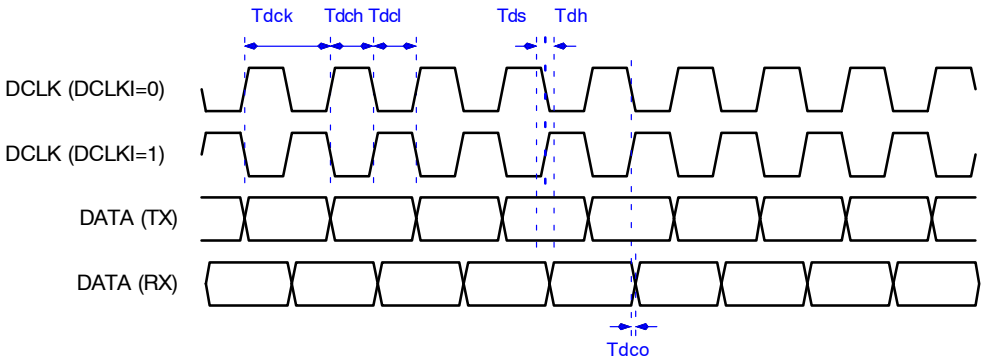

Figure 7. SPI 8 Bit Long Address Read/Write Access

General Purpose ADC (GPADC)

The AX5045 features a general purpose ADC. The ADC input pins are GPADC1 and GPADC2. The ADC converts the voltage difference applied between pins GPADC1 and GPADC2. If pin GPADC2 is left floating, the ADC converts the difference between an internally generated value of 800 mV and the voltage applied at pin GPADC1.

The GPADC can only be used if the receiver is disabled. To enable the GPADC write 1 to the ENA bit in the GPADCCTRL register. To start a single conversion, write 1 to the BUSY bit in the GPADCCTRL register. Then wait for the BUSY bit to clear, or the GPADC Interrupt to be asserted.

The GPADC Interrupt is cleared by reading the result register GPADCVALUE.

If continuous sampling is desired, set the CONT bit in register GPADCCTRL. The desired sampling rate can be specified in the GPADCPERIOD register.

ΣΔDAC

One digital Pin (ANTSEL or PWRAMP) may be used as a ΣΔ Digital−to−Analog Converter (DAC). A simple RC lowpass filter is needed to smooth the output. The DAC may be used to output RSSI, many demodulator variables, or a constant value under software control.

REGISTER BANK DESCRIPTION

This section describes the bits of the register bank as reference. The registers are grouped by functional block to facilitate programming. Register details can be found in the AX5045 Programming Manual.

An R in the retention column means that this register's contents are not lost during power−down mode.

No checks are made whether the programmed combination of bits makes sense! Bit 0 is always the LSB.

NOTES: Whole registers or register bits marked as reserved should be kept at their default values.

All addresses not documented here must not be accessed, neither in reading nor in writing.

Table 26. CONTROL REGISTER MAP

Add	Name	Dir	Ret	Reset	Bit 7	Bit 6	Bit 5	Bit 4	Bit 3	Bit 2	Bit 1	Bit 0	Description
REVISION & INTERFACE PROBING													
000	REVISION	R	R	01000110	SILICONREV(7:0)								Silicon Revision
001	SCRATCH	RW	R	11000101	SCRATCH(7:0)								Scratch Register
OPERATING MODE													
002	PWRMODE	RW	R	011−0000	RST	XOEN	REFEN	WDS	PWRMODE(3:0)				Power Mode
VOLTAGE REGULATOR													
003	POWSTAT	R	R	————	SSUM	SREF	SVREF	SVANA	SVMODEM	SBEVANA	SBEV MODEM	SVIO	Power Management Status
004	POWSTICKYSTAT	R	R	————	SSSUM	SREF	SSVREF	SSVANA	SSVMODEM	SSBEVANA	SSBEV MODEM	SSVIO	Power Management Sticky Status
005	POWIRQMASK	RW	R	00000000	MPWRGOOD	MSREF	MSVREF	MSVANA	MSVMODEM	MSBEVANA	MSBEV MODEM	MSVIO	Power Management Interrupt Mask
INTERRUPT CONTROL													
006	IRQMASK1	RW	R	—000000	–	IRQMASK(14:8)							IRQ Mask
007	IRQMASK0	RW	R	00000000	IRQMASK(7:0)								IRQ Mask
008	RADIO EVENT MASK1	RW	R	———0	–	–	–	–	–	–	–	RADIO EVENT MASK(8)	Radio Event Mask
009	RADIO EVENT MASK0	RW	R	00000000	RADIO EVENT MASK(7:0)								Radio Event Mask
00A	IRQINVERSION1	RW	R	—000000	–	IRQINVERSION(14:8)							IRQ Inversion
00B	IRQINVERSION0	RW	R	00000000	IRQINVERSION(7:0)								IRQ Inversion
00C	IRQREQUEST1	R	R	————	–	IRQREQUEST(14:8)							IRQ Request
00D	IRQREQUEST0	R	R	————	IRQREQUEST(7:0)								IRQ Request
00E	RADIO EVENT REQ1	R		————	–	–	–	–	–	–	–	RADIO EVENT REQ(8)	Radio Event Request
00F	RADIO EVENT REQ0	R		————	RADIO EVENT REQ(7:0)								Radio Event Request
MODULATION & FRAMING													
010	MODULATION	RW	R	——01000	–	–	–	RX HALF SPEED	MODULATION (3:0)				Modulation
011	ENCODING1	RW	R	———–––0	–	–	–	–	–	–	–	ENC NOSYNC	Encoder/Decoder Settings
012	ENCODING0	RW	R	00000100	TI WHITENING	ENC SCRMODE	ENC SCRPOLY(1:0>		ENC MANCH	ENC SCRAM	ENC INV(1:0)		Encoder/Decoder Settings
013	FRAMING	RW	R	——–0000	FRMRX	–	–	–	FRMMODE (2:0)			FABORT	Framing settings
014	CRCCFG	RW	R	——–0000	–	–	–	–	CRCMODE (2:0)			CRCNOIN	CRC settings
015	CRCINIT3	RW	R	11111111	CRCINIT (31:24)								CRC Initialisation Data
016	CRCINIT2	RW	R	11111111	CRCINIT (23:16)								CRC Initialisation Data
017	CRCINIT1	RW	R	11111111	CRCINIT (15:3)								CRC Initialisation Data
018	CRCINIT0	RW	R	11111111	CRCINIT (7:0)								CRC Initialisation Data

Table 26. CONTROL REGISTER MAP (continued)

Add	Name	Dir	Ret	Reset	Bit 7	Bit 6	Bit 5	Bit 4	Bit 3	Bit 2	Bit 1	Bit 0	Description
FORWARD ERROR CORRECTION													
019	FEC	RW	R	00000000	SHORT MEM	RSTVI TERBI	FEC NEG	FEC POS	FECINPSHIFT (2:0)			FEC ENA	FEC (Viterbi) Configuration
01A	FECSYNC	RW	R	01100010	FECSYNC (7:0)								Interleaver Synchronization Threshold
01B	FECSTATUS	R	R	––––––––	FEC INV	MAXMETRIC (6:0)							FEC Status
STATUS													
01C	RADIOSTATE	R	–	——0000	–	–	–	–	RADIOSTATE (3:0)				Radio Controller State
01D	XTALSTATUS	R	R	————	–	–	–	–	–	–	–	XTAL RUN	Crystal Oscillator Status
PIN CONFIGURATION													
020	PINSTATE	R	R	————	–	–	PS PWR AMP	PS ANT SEL	PS IRQ	PS DATA	PS DCLK	PS SYS CLK	Pinstate
021	PINFUNCSYSC LK	RW	R	0—01000	PU SYSCLK	–	–	PFSYSCLK(4:0)					SYSCLK Pin Function
022	PINFUNCDCLK	RW	R	00——100	PU DCLK	PI DCLK	–	–	–	PFDCLK(2:0)			DCLK Pin Function
023	PINFUNCDATA	RW	R	10——111	PU DATA	PI DATA	–	–	–	PFDATA(2:0)			DATA Pin Function
024	PINFUNCIRQ	RW	R	00——011	PU IRQ	PI IRQ	–	–	–	PFIRQ(2:0)			IRQ Pin Function
025	PINFUNCANTS EL	RW	R	00——110	PU ANTSEL	PI ANTSEL	–	–	–	PFANTSEL(2:0)			ANTSEL Pin Function
026	PINFUNCPWR AMP	RW	R	00—0110	PU PWRAMP	PI PWRAMP	–	–	PFPWRAMP(3:0)				PWRAMP Pin Function
027	PWRAMP	RW	R	————0	–	–	–	–	–	–	–	PWRAMP	PWRAMP Control
FIFO													
028	FIFOSTAT	R	R	0———	FIFO AUTO COMMIT	–	FIFO FREE THR	FIFO CNT THR	FIFO OVER	FIFO UNDER	FIFO FULL	FIFO EMPTY	FIFO Control
		W	R				FIFOCMD(5:0)						
029	FIFODATA	RW		————	FIFODATA(7:0)								FIFO Data
02A	FIFOCOUNT1	R	R	————0	–	–	–	–	–	–	–	FIFO COUNT(8)	Number of Words currently in FIFO
02B	FIFOCOUNT0	R	R	00000000	FIFOCOUNT(7:0)								Number of Words currently in FIFO
02C	FIFOFREE1	R	R	————1	–	–	–	–	–	–	–	FIFO FREE(8)	Number of Words that can be written to FIFO
02D	FIFOFREE0	R	R	00000000	FIFOFREE(7:0)								Number of Words that can be written to FIFO
02E	FIFOTHRESH1	RW	R	————0	–	–	–	–	–	–	–	FIFO THRESH(8)	FIFO Threshold
02F	FIFOTHRESH0	RW	R	00000000	FIFOTHRESH(7:0)								FIFO Threshold
SYNTHESIZER													
030	PLLLOOP	RW	R	0——1001	FREQB	–	–	–	DIRECT	FILT EN	FLT(1:0)		PLL Loop Filter Settings
031	PLLCPI	RW	R	00001000	PLLCPI								PLL Charge Pump Current (Boosted)
032	PLLRANGINGA1	RW	R	00000001	STICKY LOCK	PLL LOCK	RNGERR	RNG START	–	–	–	VCORA(8)	PLL Autoranging
033	PLLRANGINGA0	RW	R	00000000	VCORA(7:0)								PLL Autoranging
034	FREQA3	RW	R	00111001	FREQA(31:24)								Synthesizer Frequency
035	FREQA2	RW	R	00110100	FREQA(23:16)								Synthesizer Frequency
036	FREQA1	RW	R	11001100	FREQA(15:8)								Synthesizer Frequency
037	FREQA0	RW	R	11001101	FREQA(7:0)								Synthesizer Frequency
038	PLLLOOPBOOST	RW	R	0——1011	FREQB	–	–	–	DIRECT	FILT EN	FLT(1:0)		PLL Loop Filter Settings (Boosted)
039	PLLCPIBOOST	RW	R	11001000	PLLCPI								PLL Charge Pump Current

Table 26. CONTROL REGISTER MAP (continued)

Add	Name	Dir	Ret	Reset	Bit 7	Bit 6	Bit 5	Bit 4	Bit 3	Bit 2	Bit 1	Bit 0	Description
SYNTHESIZER													
03A	PLLRANGINGB1	RW	R	00000001	STICKY LOCK	PLL LOCK	RNGERR	RNG START	–	–	–	VCORB(8)	PLL Autoranging
03B	PLLRANGINGB0	RW	R	00000000	VCORB(7:0)								PLL Autoranging
03C	FREQB3	RW	R	00111001	FREQB(31:24)								Synthesizer Frequency
03D	FREQB2	RW	R	00110100	FREQB(23:16)								Synthesizer Frequency
03E	FREQB1	RW	R	11001100	FREQB(15:8)								Synthesizer Frequency
03F	FREQB0	RW	R	11001101	FREQB(7:0)								Synthesizer Frequency
040	PLLVCODIV	RW	R	——0000	–	–	–	RFDIV			REFDIV(1:0)		PLL Divider Settings
SIGNAL STRENGTH													
041	RSSI	R	R	————	RSSI(7:0)								Received Signal Strength Indicator
042	BGNDRSSI	RW	R	00000000	BGNDRSSI(7:0)								Background RSSI
043	DIVERSITY	RW	R	———00	–	–	–	–	–	–	ANT SEL	DIV ENA	Antenna Diversity Configuration
043	AGCCOUNTER	RW	R	--------	AGCCOUNTER (7:0)								AGC Current Value
RECEIVER TRACKING													
045	TRKDATARATE 2	R	R	————	TRKDATARATE(23:16)								Datarate Tracking
046	TRKDATARATE 1	R	R	————	TRKDATARATE(15:8)								Datarate Tracking
047	TRKDATARATE 0	R	R	————	TRKDATARATE(7:0)								Datarate Tracking
048	TRKAMPL1	R	R	————	TRKAMPL (15:8)								Amplitude Tracking
049	TRKAMPL0	R	R	————	TRKAMPL (7:0)								Amplitude Tracking
04A	TRKPHASE1	R	R	————	–	–	–	–	TRKPHASE(11:8)				Phase Tracking
04B	TRKPHASE0	R	R	————	TRKPHASE (7:0)								Phase Tracking
04D	TRKRFFREQ2	RW	R	————	–	–	–	–	TRRFKFREQ(19:16)				RF Frequency Tracking
04E	TRKRFFREQ1	RW	R	————	TRRFKFREQ(15:8)								RF Frequency Tracking
04F	TRKRFFREQ0	RW	R	————	TRRFKFREQ(7:0)								RF Frequency Tracking
050	TRKFREQ1	RW	R	————	TRKFREQ(15:8)								Frequency Tracking
051	TRKFREQ0	RW	R	————	TRKFREQ(7:0)								Frequency Tracking
052	TRKFSKDEMOD1	R	R	————	–	–	TRKFSKDEMOD(13:8)						FSK Demodulator Tracking
053	TRKFSKDEMOD0	R	R	————	TRKFSKDEMOD(7:0)								FSK Demodulator Tracking
054	TRKAFSKDE MOD1	R	R	————	TRKAFSKDEMOD(15:8)								AFSK Demodulator Tracking
055	TRKAFSKDE MOD0	R	R	————	TRKAFSKDEMOD(7:0)								AFSK Demodulator Tracking
TIMER													
059	TIMER2	R	–	————	TIMER(23:16)								1MHz Timer
05A	TIMER1	R	–	————	TIMER(15:8)								1MHz Timer
05B	TIMER0	R	–	————	TIMER(7:0)								1MHz Timer
WAKEUP TIMER													
068	WAKEUPTIMER 1	R	R	————	WAKEUPTIMER(15:8)								Wakeup Timer
069	WAKEUPTIMER 0	R	R	————	WAKEUPTIMER(7:0)								Wakeup Timer
06A	WAKEUP1	RW	R	00000000	WAKEUP(15:8)								Wakeup Time
06B	WAKEUP0	RW	R	00000000	WAKEUP(7:0)								Wakeup Time
06C	WAKEUPFREQ 1	RW	R	00000000	WAKEUPFREQ(15:8)								Wakeup Frequency
06D	WAKEUPFREQ 0	RW	R	00000000	WAKEUPFREQ(7:0)								Wakeup Frequency

Table 26. CONTROL REGISTER MAP (continued)

Add	Name	Dir	Ret	Reset	Bit 7	Bit 6	Bit 5	Bit 4	Bit 3	Bit 2	Bit 1	Bit 0	Description
WAKEUP TIMER													
06E	WAKEUPXO EARLY	RW	R	00000000	WAKEUPXOEARLY								Wakeup Crystal Oscillator Early
DSPmode2													
06F	DSPMODESHREG	RW		————	DSPMODESHREG								DSPmode SPI Shift Register Access
PHYSICAL LAYER PARAMETERS													
RECEIVER PARAMETERS													
100	IFFREQ1	RW	R	00010001	IFFREQ(15:8)								2nd LO / IF Frequency
101	IFFREQ0	RW	R	00100111	IFFREQ(7:0)								2nd LO / IF Frequency
102	DECIMATION1	RW	R	———00	–	–	–	–	–	–	DECIMATION(9:8)		Decimation Factor
103	DECIMATION0	RW	R	00001101	DECIMATION(7:0)								Decimation Factor
104	RXDATARATE2	RW	R	00000000	RXDATARATE(23:16)								Receiver Datarate
105	RXDATARATE1	RW	R	00111101	RXDATARATE(15:8)								Receiver Datarate
106	RXDATARATE0	RW	R	10001010	RXDATARATE(7:0)								Receiver Datarate
107	MAXDROFFSET2	RW	R	00000000	MAXDROFFSET(23:16)								Maximum Receiver Datarate Offset
108	MAXDROFFSET1	RW	R	00000000	MAXDROFFSET(15:8)								Maximum Receiver Datarate Offset
109	MAXDROFFSET0	RW	R	10011110	MAXDROFFSET(7:0)								Maximum Receiver Datarate Offset
10A	MAXRFOFFSET2	RW	R	0——0000	FREQ OESS	–	–	–	MAXRFOFFSET(19:16)				Maximum Receiver RF Offset
10B	MAXRFOFFSET1	RW	R	00010110	MAXRFOFFSET(15:8)								Maximum Receiver RF Offset
10C	MAXRFOFFSET0	RW	R	10000111	MAXRFOFFSET(7:0)								Maximum Receiver RF Offset
10D	FSKDMAX1	RW	R	00000000	FSKDEVMAX(15:8)								Four FSK Rx Deviation
10E	FSKDMAX0	RW	R	10000000	FSKDEVMAX(7:0)								Four FSK Rx Deviation
10F	FSKDMIN1	RW	R	11111111	FSKDEVMIN(15:8)								Four FSK Rx Deviation
110	FSKDMIN0	RW	R	10000000	FSKDEVMIN(7:0)								Four FSK Rx Deviation
111	AFSKSPACE1	RW	R	——0000	–	–	–	–	AFSKSPACE(11:8)				AFSK Space (0) Frequency
112	AFSKSPACE0	RW	R	01000000	AFSKSPACE(7:0)								AFSK Space (0) Frequency
113	AFSKMARK1	RW	R	——0000	–	–	–	–	AFSKMARK(11:8)				AFSK Mark (1) Frequency
114	AFSKMARK0	RW	R	01110101	AFSKMARK(7:0)								AFSK Mark (1) Frequency
115	AFSKCTRL	RW	R	——00100	–	–	–	AFSKSHIFT0(4:0)					AFSK Control
116	AMPLFILTER	RW	R	——0000	–	–	–	–	AMPLFILTER(3:0)				Amplitude Filter
117	RFZIGZAGAMPL	RW	R	0000000	ZIGZAGAMPLEXP(3:0)				ZIGZAGAMPLMANT(3:0)				RF Zigzag Scanner Amplitude Exponent and Mantissa
118	RFZIGZAGFREQ	RW	R	0000000	ZIGZAGFREQ(7:0)								RF Zigzag Scanner Amplitude Exponent and Mantissa
119	RFFREQUENCY LEAK	RW	R	——00000	–	–	–	RFFREQUENCYLEAK[4:0]					RF Frequency Recovery Loop Leakiness
11A	FREQUENCY LEAK	RW	R	0——0000	PH HALF ACC	–	–	–				FREQUENCY LEAK[3:0]	Baseband Frequency Recovery Loop Leakiness
11B	RXPARAMSETS	RW	R	00000000	RXPS3(1:0)		RXPS2(1:0)		RXPS1(1:0)		RXPS0(1:0)		Receiver Parameter Set Indirection

Table 26. CONTROL REGISTER MAP (continued)

Add	Name	Dir	Ret	Reset	Bit 7	Bit 6	Bit 5	Bit 4	Bit 3	Bit 2	Bit 1	Bit 0	Description
RECEIVER PARAMETERS													
11C	RXPARAMCUR SET	R	R	————	–	–	–	RXSI(2)	RXSN(1:0)		RXSI(1:0)		Receiver Parameter Current Set
11D	RSSIIRQTHRESH	RW	R	0000000	RSSIIRQTHRESH(7:0)								RSSI Interrupt Threshold
11E	RSSIIRQDIR	RW	R	———0	–	–	–	–	–	–	–	RSSIIRQDIR	RSSI Interrupt Threshold Direction
RECEIVER PARAMETER SET 0													
120	AGCTARGET0	RW	R	01110110	AGCTARGET0(7:0)								AGC Target
121	AGCINCREASE0	RW	R	10110100	AGCDECAY0(4:0)					AGCMINDA0(2:0)			AGC Gain Increase Settings
122	AGCREDUCE0	RW	R	00100000	AGCATTACK0(4:0)					AGCMAXDA0(2:0)			AGC Gain Reduce Settings
123	AGCAHYST0	RW	R	———000	–	–	–	–	–	AGCAHYST0(2:0)			AGC Digital Threshold Range
124	TIMEGAIN0	RW	R	11111000	TIMEGAIN0M				TIMEGAIN0E				Timing Gain
125	DRGAIN0	RW	R	11110010	DRGAIN0M				DRGAIN0E				Data Rate Gain
126	PHASEGAIN0	RW	R	11—0011	FILTERIDX0(1:0)		–	–	PHASEGAIN0(3:0)				Filter Index, Phase Gain
127	FREQGAINA0	RW	R	00001111	FREQ LIM0	FREQ MODULO0	FREQ HALFMOD0	FREQ AMPL GATE0	FREQGAINA0(3:0)				Frequency Gain A
128	FREQGAINB0	RW	R	00–11111	FREQ FREEZE0	FREQ AVG0	–	FREQGAINB0(4:0)					Frequency Gain B
129	FREQGAINC0	RW	R	——01010	–	–	–	FREQGAINC0(4:0)					Frequency Gain C
12A	FREQGAIND0	RW	R	0—01010	RFFREQ FREEZE0	–	–	FREQGAIND0(4:0)					Frequency Gain D
12B	AMPLGAIN0	RW	R	01—0110	AMPL AVG	AMPL AGC	–	–	AMPLGAIN0(3:0)				Amplitude Gain
12C	FREQDEV10	RW	R	——0000	–	–	–	–	FREQDEV0(11:8)				Receiver Frequency Deviation
12D	FREQDEV00	RW	R	00100000	FREQDEV0(7:0)								Receiver Frequency Deviation
12E	FOURFSK0	RW	R	——10110	–	–	–	DEV UPDATE0	DEVDECAY0(3:0)				Four FSK Control
12F	BBOFFSRES0	RW	R	10001000	RESINTB0(3:0)				RESINTA0(3:0)				Baseband Offset Compensation Resistors
RECEIVER PARAMETER SET 1													
130	AGCTARGET1	RW	R	01110110	AGCTARGET1(7:0)								AGC Target
131	AGCINCREASE1	RW	R	10110100	AGCDECAY1(4:0)					AGCMINDA1(2:0)			AGC Gain Increase Settings
132	AGCREDUCE1	RW	R	00100000	AGCATTACK1(4:0)					AGCMAXDA1(2:0)			AGC Gain Reduce Settings
133	AGCAHYST1	RW	R	———000	–	–	–	–	–	AGCAHYST1(2:0)			AGC Digital Threshold Range
134	TIMEGAIN1	RW	R	11110110	TIMEGAIN1M				TIMEGAIN1E				Timing Gain
135	DRGAIN1	RW	R	11110001	DRGAIN1M				DRGAIN1E				Data Rate Gain
136	PHASEGAIN1	RW	R	11—0011	FILTERIDX1(1:0)		–	–	PHASEGAIN1(3:0)				Filter Index, Phase Gain
137	FREQGAINA1	RW	R	00001111	FREQ LIM1	FREQ MODULO1	FREQ HALFMOD1	FREQ AMPL GATE1	FREQGAINA1(3:0)				Frequency Gain A
138	FREQGAINB1	RW	R	00–11111	FREQ FREEZE1	FREQ AVG1	–	FREQGAINB1(4:0)					Frequency Gain B
139	FREQGAINC1	RW	R	——01011	–	–	–	FREQGAINC1(4:0)					Frequency Gain C
13A	FREQGAIND1	RW	R	0—01011	RFFREQ FREEZE1	–	–	FREQGAIND1(4:0)					Frequency Gain D
13B	AMPLGAIN1	RW	R	01—0110	AMPL AVG1	AMPL1 AGC1	–	–	AMPLGAIN1(3:0)				Amplitude Gain
13C	FREQDEV11	RW	R	——0000	–	–	–	–	FREQDEV1(11:8)				Receiver Frequency Deviation
13D	FREQDEV01	RW	R	00100000	FREQDEV1(7:0)								Receiver Frequency Deviation

Table 26. CONTROL REGISTER MAP (continued)

Add	Name	Dir	Ret	Reset	Bit 7	Bit 6	Bit 5	Bit 4	Bit 3	Bit 2	Bit 1	Bit 0	Description
RECEIVER PARAMETER SET 1													
13E	FOURFSK1	RW	R	——11000	–	–	–	DEV UPDATE1	DEVDECAY1(3:0)				Four FSK Control
13F	BBOFFSRES1	RW	R	10001000	RESINTB1(3:0)				RESINTA1(3:0)				Baseband Offset Compensation Resistors
RECEIVER PARAMETER SET 2													
140	AGCTARGET2	RW	R	01110110	AGCTARGET2(7:0)								AGC Target
141	AGCINCREASE2	RW	R	10110100	AGCDECAY2(4:0)					AGCMINDA2(2:0)			AGC Gain Increase Settings
142	AGCREDUCE2	RW	R	00100000	AGCATTACK2(4:0)					AGCMAXDA2(2:0)			AGC Gain Reduce Settings
143	AGCAHYST2	RW	R	———000	–	–	–	–	–	AGCAHYST2(2:0)			AGC Digital Threshold Range
144	TIMEGAIN2	RW	R	11110101	TIMEGAIN2M				TIMEGAIN2E				Timing Gain
145	DRGAIN2	RW	R	11110000	DRGAIN2M				DRGAIN2E				Data Rate Gain
146	PHASEGAIN2	RW	R	11—0011	FILTERIDX2(1:0)		–	–	PHASEGAIN2(3:0)				Filter Index, Phase Gain
147	FREQGAINA2	RW	R	00001111	FREQ LIM2	FREQ MODULO2	FREQ HALFMOD2	FREQ AMPL GATE2	FREQGAINA2(3:0)				Frequency Gain A
148	FREQGAINB2	RW	R	00–11111	FREQ FREEZE2	FREQ AVG2	–	FREQGAINB2(4:0)					Frequency Gain B
149	FREQGAINC2	RW	R	——01101	–	–	–	FREQGAINC2(4:0)					Frequency Gain C
14A	FREQGAIND2	RW	R	0—01101	RFFREQ FREEZE2	–	–	FREQGAIND2(4:0)					Frequency Gain D
14B	AMPLGAIN2	RW	R	01—0110	AMPL AVG2	AMPL AGC2	–	–	AMPLGAIN2(3:0)				Amplitude Gain
14C	FREQDEV12	RW	R	———0000	–	–	–	–	FREQDEV2(11:8)				Receiver Frequency Deviation
14D	FREQDEV02	RW	R	00100000	FREQDEV2(7:0)								Receiver Frequency Deviation
14E	FOURFSK2	RW	R	——11010	–	–	–	DEV UPDATE2	DEVDECAY2(3:0)				Four FSK Control
14F	BBOFFSRES2	RW	R	10001000	RESINTB2(3:0)				RESINTA2(3:0)				Baseband Offset Compensation Resistors
RECEIVER PARAMETER SET 3													
160	MODCFGF	RW	R	———000	–	–	–	–	–	FREQ SHAPE(2:0)			Modulator Configuration F
161	FSKDEV2	RW	R	00000000	FSKDEV(23:16)								FSK Frequency Deviation
162	FSKDEV1	RW	R	00001010	FSKDEV(15:8)								FSK Frequency Deviation
163	FSKDEV0	RW	R	00111101	FSKDEV(7:0)								FSK Frequency Deviation
164	MODCFGA	RW	R	0000–101	BROWN GATE	PTTLCK GATE	SLOW RAMP		–	AMPL SHAPE	TX SE	TX DIFF	Modulator Configuration A
165	TXRATE2	RW	R	00000000	TXRATE(23:16)								Transmitter Bitrate
166	TXRATE1	RW	R	00101000	TXRATE(15:8)								Transmitter Bitrate
167	TXRATE0	RW	R	11110110	TXRATE(7:0)								Transmitter Bitrate
168	TXPWRCOEFF A1	RW	R	00000000	TXPWRCOEFFA(15:8)								Transmitter Predistortion Coefficient A
169	TXPWRCOEFF A0	RW	R	00000000	TXPWRCOEFFA(7:0)								Transmitter Predistortion Coefficient A
16A	TXPWRCOEFF B1	RW	R	00001111	TXPWRCOEFFB(15:8)								Transmitter Predistortion Coefficient B
16B	TXPWRCOEFF B0	RW	R	11111111	TXPWRCOEFFB(7:0)								Transmitter Predistortion Coefficient B
16C	TXPWRCOEFF C1	RW	R	00000000	TXPWRCOEFFC(15:8)								Transmitter Predistortion Coefficient C
16D	TXPWRCOEFF C0	RW	R	00000000	TXPWRCOEFFC(7:0)								Transmitter Predistortion Coefficient C

Table 26. CONTROL REGISTER MAP (continued)

Add	Name	Dir	Ret	Reset	Bit 7	Bit 6	Bit 5	Bit 4	Bit 3	Bit 2	Bit 1	Bit 0	Description
RECEIVER PARAMETER SET 3													
16E	TXPWRCOEFFD1	RW	R	00000000	TXPWRCOEFFD(15:8)								Transmitter Predistortion Coefficient D
16F	TXPWRCOEFFD0	RW	R	00000000	TXPWRCOEFFD(7:0)								Transmitter Predistortion Coefficient D
170	TXPWRCOEFFE1	RW	R	00000000	TXPWRCOEFFE(15:8)								Transmitter Predistortion Coefficient E
171	TXPWRCOEFFE0	RW	R	00000000	TXPWRCOEFFE(7:0)								Transmitter Predistortion Coefficient E
172	TXCLKDIV	RW	R	——00000	–	–	–	TXHALF SPEED	TXINTERP		TXCLKDIV		Transmitter Clock Divider
173	TXCLKDIV	RW	R	——00000	–	–	–	–	–	–	MSHAPE		Transmitter Amplitude Shaping
175	TXCONTROL				unused								
176	TXMISC	RW	R	00000000	–	TXREGSNK	TXSTG2	TXSTG3	DACDISABLE	DACTESTEN	DACTRIM (2:0)		
PLL PARAMETERS													
180	PLLVCOI	RW	R	———011	–	–	–	–	–	VCOI(2:0)			VCO Current
182	PLLLOCKDET	RW	R	———011	LOCKDETDLYR(1:0)		–	–	–	LOCK DET DLYM	LOCKDETDLY(1:0)		PLL Lock Detect Delay
183	PLLRNGCFG	RW	R	—000011	–	–	PLLRNGMODE(2:0)			PLLRNGCLK(2:0)			PLL Ranging Configuration
184	PLLDITHER	RW	R	00–10111	DTX	DRX	–	MAGNITUDE(4:0)					PLL Dither
BASEBAND													
188	BBTUNE	RW	R	——01001	–	–	–	BB TUNE RUN	BBTUNE(3:0)				Baseband Tuning
189	BBOFFSCAP	RW	R	–111–111	–	CAP INT B(2:0)			–	CAP INT A(2:0)			Baseband Offset Compensation Capacitors
190	ADCCLK	RW	R	–0111100		CLKFREQ(4:0)					CLKMUX(1:0)		SAR ADC Clock Settings
191	ADCMISC	RW	R	————0	–	–	–	–	–	–	–	SKIP CALIB	SAR ADC Miscellaneous Settings
192	ADCSPARE	RW	R	———00	–	–	–	–	–	–	ADCSPARE(1:0)		SAR ADC Spare Bits for Analog Settings

MAC LAYER PARAMETERS

PACKET FORMAT

Add	Name	Dir	Ret	Reset	Bit 7	Bit 6	Bit 5	Bit 4	Bit 3	Bit 2	Bit 1	Bit 0	Description
200	PKTADDRCFG	RW	R	001–0000	MSB FIRST	CRC SKIP FIRST	FEC SYNC DIS	–	ADDR POS(3:0)				Packet Address Config
201	PKTLENPOS	RW	R	00000000	LEN MSB POS(3:0)				LEN LSB POS(3:0)				Packet Length Byte Position
202	PKTLENBITS	RW	R	——0000	–	–	–	–	LEN BITS(3:0)				Packet Length Significant Bits
203	PKTLENOFFSET1	RW	R	——00000	–	–	–	LEN OFFSET(12:8)					Packet Length Offset 1
204	PKTLENOFFSET0	RW	R	00000000	LEN OFFSET(7:0)								Packet Length Offset 0
205	PKTMAXLEN	RW	R	——0000	–	–	–	–	MAX LEN(11:8)				Packet Maximum Length 1
206	PKTMAXLEN0	RW	R	00000000	MAX LEN(7:0)								Packet Maximum Length 0
207	PKTADDR3	RW	R	00000000	ADDR(31:24)								Packet Address 3
208	PKTADDR2	RW	R	00000000	ADDR(23:16)								Packet Address 2
209	PKTADDR1	RW	R	00000000	ADDR(15:8)								Packet Address 1
20A	PKTADDR0	RW	R	00000000	ADDR(7:0)								Packet Address 0
20B	PKTADDRMASK3	RW	R	00000000	ADDRMASK(31:24)								Packet Address Mask 1
20C	PKTADDRMASK2	RW	R	00000000	ADDRMASK(23:16)								Packet Address Mask 0
20D	PKTADDRMASK1	RW	R	00000000	ADDRMASK(15:8)								Packet Address Mask 1
20E	PKTADDRMASK0	RW	R	00000000	ADDRMASK(7:0)								Packet Address Mask 0

Table 26. CONTROL REGISTER MAP (continued)

Add	Name	Dir	Ret	Reset	Bit 7	Bit 6	Bit 5	Bit 4	Bit 3	Bit 2	Bit 1	Bit 0	Description
PATTERN MATCH													
210	MATCH0APAT3	RW	R	00000000	MATCH0APAT(31:24)								Pattern Match Unit 0a, Pattern
211	MATCH0APAT2	RW	R	00000000	MATCH0APAT(23:16)								Pattern Match Unit 0a, Pattern
212	MATCH0APAT1	RW	R	00000000	MATCH0APAT(15:8)								Pattern Match Unit 0a, Pattern
213	MATCH0APAT0	RW	R	00000000	MATCH0APAT(7:0)								Pattern Match Unit 0a, Pattern
214	MATCH0ALEN	RW	R	0—00000	MATCH0 RAW	–	–					MATCH0ALE N(4:0)	Pattern Match Unit 0a, Pattern Length
215	MATCH0AMIN	RW	R	——00000	–	–	–					MATCH0AMI N(4:0)	Pattern Match Unit 0a, Minimum Match
216	MATCH0AMAX	RW	R	——11111	–	–	–					MATCH0AMA X(4:0)	Pattern Match Unit 0a, Maximum Match
217	MATCH0BPAT3	RW	R	00000000	MATCH0BPAT(31:24)								Pattern Match Unit 0b, Pattern
218	MATCH0BPAT2	RW	R	00000000	MATCH0BPAT(23:16)								Pattern Match Unit 0b, Pattern
219	MATCH0BPAT1	RW	R	00000000	MATCH0BPAT(15:8)								Pattern Match Unit 0b, Pattern
21A	MATCH0BPAT0	RW	R	00000000	MATCH0BPAT(7:0)								Pattern Match Unit 0b, Pattern
21B	MATCH0BLEN	RW	R	——00000	–	–	–					MATCH0BLE N(4:0)	Pattern Match Unit 0b, Pattern Length
21C	MATCH0BMIN	RW	R	——00000	–	–	–					MATCH0BMI N(4:0)	Pattern Match Unit 0b, Minimum Match
21D	MATCH0BMAX	RW	R	——11111	–	–	–					MATCH0BMA X(4:0)	Pattern Match Unit 0b, Maximum Match
220	MATCH1PAT1	RW	R	00000000	MATCH1PAT(15:8)								Pattern Match Unit 1, Pattern
221	MATCH1PAT0	RW	R	00000000	MATCH1PAT(7:0)								Pattern Match Unit 1, Pattern
222	MATCH1LEN	RW	R	0——0000	MATCH1 RAW	–	–	–	MATCH1LEN(3:0)				Pattern Match Unit 1, Pattern Length
223	MATCH1MIN	RW	R	——0000	–	–	–	–	MATCH1MIN(3:0)				Pattern Match Unit 1, Minimum Match
224	MATCH1MAX	RW	R	——1111	–	–	–	–	MATCH1MAX(3:0)				Pattern Match Unit 1, Maximum Match
PACKET CONTROLLER													
230	TMGTXBOOST	RW	R	00110010	TMGTXBOOSTE(2:0)			TMGTXBOOSTM(4:0)					Transmit PLL Boost Time
231	TMGTXSETTLE	RW	R	00001010	TMGTXSETTLEE(2:0)			TMGTXSETTLEM(4:0)					Transmit PLL (post Boost) Settling Time
232	TMGRXBOOST	RW	R	00110010	TMGRXBOOSTE(2:0)			TMGRXBOOSTM(4:0)					Receive PLL Boost Time
233	TMGRXSETTLE	RW	R	00010100	TMGRXSETTLEE(2:0)			TMGRXSETTLEM(4:0)					Receive PLL (post Boost) Settling Time
234	TMGRXOFFSA CQ	RW	R	01110011	TMGRXOFFSACQE(2:0)			TMGRXOFFSACQM(4:0)					Receive Baseband DC Offset Acquisition Time
235	TMGRXCOARS EAGC	RW	R	00111001	TMGRXCOARSEAGCE(2:0)			TMGRXCOARSEAGCM(4:0)					Receive Coarse AGC Time
236	TMGRXAGC	RW	R	00000000	TMGRXAGCE(2:0)			TMGRXAGCM(4:0)					Receiver AGC Settling Time
237	TMGRXRSSI	RW	R	00000000	TMGRXRSSIE(2:0)			TMGRXRSSIM(4:0)					Receiver RSSI Settling Time
238	TMGRXPREAM BLE1	RW	R	00000000	TMGRXPREAMBLE1E(2:0)			TMGRXPREAMBLE1M(4:0)					Receiver Preamble 1 Timeout
239	TMGRXPREAM BLE2	RW	R	00000000	TMGRXPREAMBLE2E(2:0)			TMGRXPREAMBLE2M(4:0)					Receiver Preamble 2 Timeout
23A	TMGRXPREAM BLE3	RW	R	00000000	TMGRXPREAMBLE3E(2:0)			TMGRXPREAMBLE3M(4:0)					Receiver Preamble 3 Timeout

Table 26. CONTROL REGISTER MAP (continued)

Add	Name	Dir	Ret	Reset	Bit 7	Bit 6	Bit 5	Bit 4	Bit 3	Bit 2	Bit 1	Bit 0	Description
PACKET CONTROLLER													
23B	RSSIREFERENCE	RW	R	00000000	RSSIREFERENCE								RSSI Offset
23C	RSSIABSTHR	RW	R	00000000	RSSIABSTHR								RSSI Absolute Threshold
23D	BGNDRSSIGAIN	RW	R	——0000	–	–	–	–	BGNDRSSIGAIN(3:0)				Background RSSI Averaging Time Constant
23E	BGNDRSSITHR	RW	R	—000000	–	–	BGNDRSSITHR(5:0)						Background RSSI Relative Threshold
240	PKTCHUNKSIZE	RW	R	00000000	PKTCHUNKSIZE(7:0)								Packet Chunk Size
241	PKTMISCFLAGS	RW	R	—000000	–	–	ADDL FEC SYNCFLG	WOR MULTI PKT	AGC SETTL DET	BGND RSSI	RXAGC CLK	RXRSSI CLK	Packet Controller Miscellaneous Flags
242	PKTSTOREFLAGS	RW	R	–0000000	–	ST ANT RSSI	ST CRCB	ST RSSI	ST DR	ST RFOFFS	ST FOFFS	ST TIMER	Packet Controller Store Flags
243	PKTACCEPT FLAGS	RW	R	—000000	–	–	ACCPT LRGP	ACCPT SZF	ACCPT ADDRF	ACCPT CRCF	ACCPT ABRT	ACCPT RESIDUE	Packet Controller Accept Flags
SPECIAL FUNCTIONS													
GENERAL PURPOSE ADC													
300	GPADCCTRL	RW	R	—000000	BUSY	–	GPADC3	GPADC2	GPADC1	GPADC13	CONT	CH ISOL	General Purpose ADC Control
301	GPADCPERIOD	RW	R	00111111	GPADCPERIOD(7:0)								GPADC Sampling Period
308	GPADC13VALUE1	R		————	–	–	–	–	–	–	GPADC13VALUE(9:8)		GPADC13 Value
309	GPADC13VALUE0	R		————	GPADC13VALUE(7:0)								GPADC13 Value
30A	GPADC1VALUE1	R		————	–	–	–	–	–	–	GPADC1VALUE(9:8)		GPADC1 Value
30B	GPADC1VALUE0	R		————	GPADC1VALUE(7:0)								GPADC1 Value
30C	GPADC2VALUE1	R		————	–	–	–	–	–	–	GPADC2VALUE(9:8)		GPADC2 Value
30D	GPADC2VALUE0	R		————	GPADC2VALUE(7:0)								GPADC2 Value
30E	GPADC3VALUE1	R		————	–	–	–	–	–	–	GPADC3VALUE(9:8)		GPADC3 Value
30F	GPADC3VALUE0	R		————	GPADC3VALUE(7:0)								GPADC3 Value
LOW POWER OSCILLATOR CALIBRATION													
310	LPOSCCONFIG	RW	R	00000000	LPOC OSC IVERT	–	LPOSC CALIBR	LPOSC CALIBF	LPOSC IRQR	LPOSC IRQF	LPOSC FAST	LPOSC ENA	Low Power Oscillator Configuration
311	LPOSCSTATUS	R	R	————	–	–	–	–	–	–	LPOSC IRQ	LPOSC EDGE	Low Power Oscillator Status
312	LPOSCCLKMUX	RW	R	———00	–	–	–	–	–	–	LPOSCCLKMUX(1:0)		LPOSC Reference Frequency Divider
313	LPOSCKFILT1	RW	R	00100000	LPOSCKFILT(15:8)								Low Power Oscillator Calibration Filter Constant
314	LPOSCKFILT0	RW	R	11000100	LPOSCKFILT(7:0)								Low Power Oscillator Calibration Filter Constant
315	LPOSCREF1	RW	R	01100001	LPOSCREF(15:8)								Low Power Oscillator Calibration Reference
316	LPOSCREF0	RW	R	10101000	LPOSCREF(7:0)								Low Power Oscillator Calibration Reference
317	LPOSCFREQ1	RW	R	00000000	LPOSCFREQ(9:2)								Low Power Oscillator Calibration Frequency
318	LPOSCFREQ0	RW	R	0000——	LPOSCFREQ(1:–2)				–	–	–	–	Low Power Oscillator Calibration Frequency
319	LPOSCPER1	RW		————	LPOSCPER(15:8)								Low Power Oscillator Calibration Period
31A	LPOSCPER0	RW		————	LPOSCPER(7:0)								Low Power Oscillator Calibration Period

Table 26. CONTROL REGISTER MAP (continued)

Add	Name	Dir	Ret	Reset	Bit 7	Bit 6	Bit 5	Bit 4	Bit 3	Bit 2	Bit 1	Bit 0	Description
DSP MODE INTERFACE													
320	DSPMODECFG	RW	R	00——00	FSYNC DLY	DSP SPI	–	–	–	–	SYNC SOURCE(1:0)		DSP Mode Setting
321	DSPMODESKIP1	RW	R	–0000000	–	SKIP AGC	SKIP RSSI	SKIP AFSK DEMOD	SKIP FSK DEMOD	SKIP DATARATE	SKIP PHASE	SKIP FREQ	DSP Mode Skip 1
322	DSPMODESKIP0	RW	R	00000000	SKIP RF FREQ	SKIP AMPL	SKIP SAMP PHASE	SKIP SAMP MAG	SKIP SAMP ROTIQ	SKIP SAMP IQ	SKIP BASE BANDIQ	SKIP SOFT SAMP	DSP Mode Skip 0
DAC													
330	DACVALUE1	RW	R	——0000	–	–	–	–	DACVALUE(11:8)				DAC Value
331	DACVALUE2	RW	R	00000000	DACVALUE(7:0)								DAC Value
332	DACCONFIG	RW	R	00—0000	DAC PW M	DAC CLK X2	–	–	DACINPUT(3:0)				DAC Configuration
RX CONTROL													
F00	SPAREOUT	RW	R	00000000	–	–	–	–	LNABIAS				LNA Bias

APPLICATION INFORMATION

Certification

Customers using AX5045, as with any product containing a radio, have the responsibility to ensure, at a product level, that their usage of this product complies with regulatory requirements where it's operated.

ON Semiconductor makes an effort to create pre−compliant reference designs that customers can use or copy directly, however ON Semiconductor is not liable for customer's failure to comply with regulatory obligations.

Typical Application Diagrams

The following diagrams and any resulting component values or equations are provided as a starting point. Real components have non−ideal effects, PCBs and soldering introduce additional parasitics, and variations in ground planes, antennas, etc, all influence the RF matching and RF performance and cannot be guaranteed or predicted in advance.

To help lower risk, ON Semiconductor creates reference designs that customers can use as a starting point. However the customer should anticipate some fine tuning of the RF matching network for their system. All RF transceiver products are subject to these fundamental sensitivities.

Using Separate RX/TX Connections

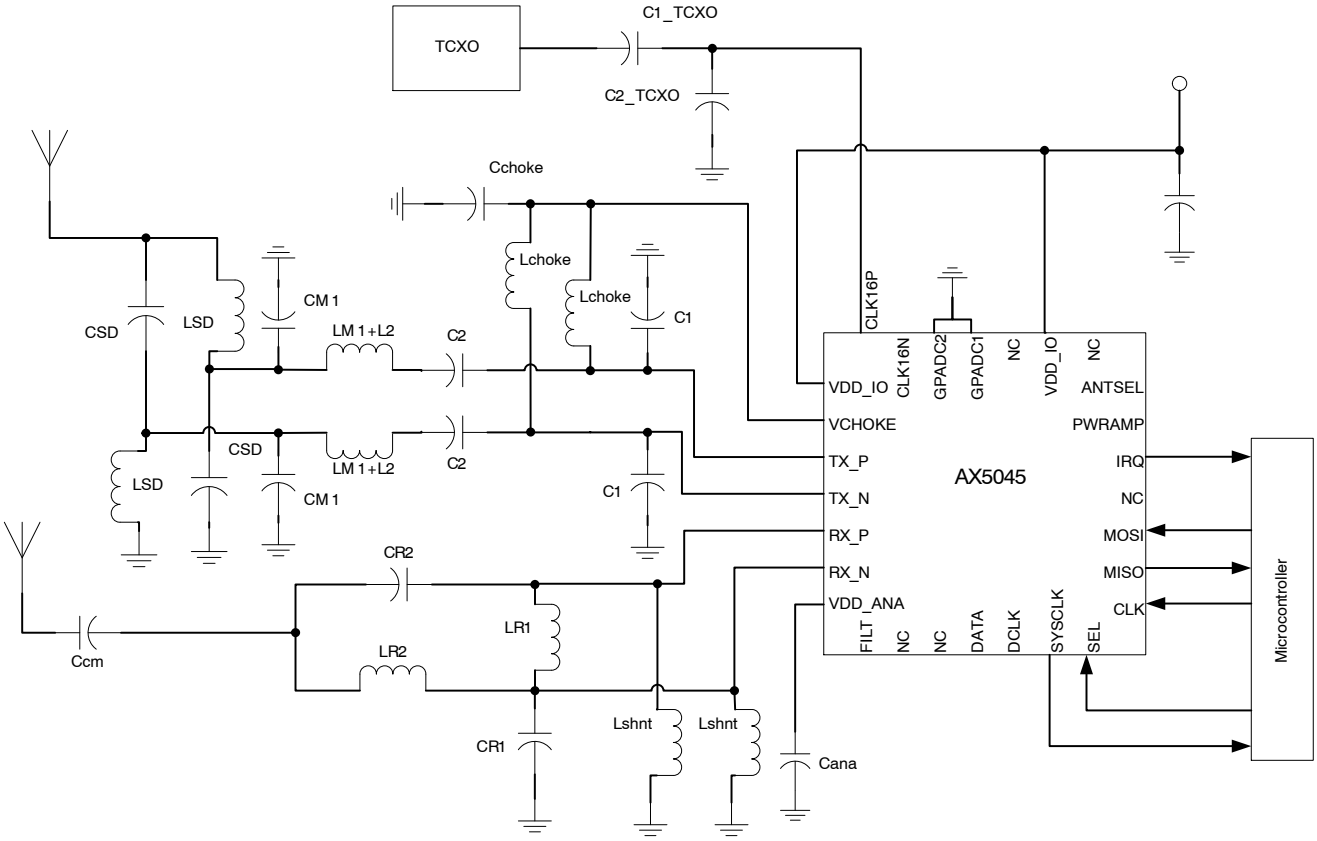

Figure 8. Typical Application Diagram with Separate RX/TX Antennas without RX/TX Switch

Several external components are needed for the PA including the tuning components which are determined using the following equations for the load or antenna.

The equations are used to determine the ideal values of C1, C2 and L2. The values of L_{choke} and C_{choke} are chosen. V_{choke}, the regulator output or supply to the choke inductor, should be large for efficiency. Vchoke is designed to be a maximum of 2.8V. L_{choke} is generally chosen to be large enough that it looks like a high impedence at the carrier frequency.

The equations are:

$$R_L = \frac{(V_{choke} - V_{sat})^2}{P_{out}} \times 0.576801 \times \left(1.001245 - \frac{0.417395}{Q_L} - \frac{0.577501}{Q_L^2} + \frac{0.205967}{Q_L^3}\right) \quad \text{(eq. 2)}$$

$$C_1 = \frac{1}{34.2219 \times f_o \times R_L} \times \left(0.99855 + \frac{0.91424}{Q_L} - \frac{1.03175}{Q_L^2}\right) + \frac{0.6}{(2 \times \pi \times f_o)^2 \times L_{choke}} \quad \text{(eq. 3)}$$

$$C_2 = \frac{1}{2 \times \pi \times f_o \times R_L} \times \frac{1}{Q_L - 0.104823} \times \left(1.00121 + \frac{1.01468}{Q_L - 1.7879}\right) + \frac{0.2}{(2 \times \pi \times f_o)^2 \times L_{choke}} \quad \text{(eq. 4)}$$

$$L_2 = \frac{Q_L \times R_L}{2 \times \pi \times f_o} \quad \text{(eq. 5)}$$

Where: P_{out} = half the desired total output power in watts to account for the differential to single−ended combining
V_{sat} = the saturation voltage of the switch transistor, ~0.7 V. This can be adjusted to achieve the desired power
Q_L = loaded quality factor of the series L_2C_2 (in the range 2−3)
V_{choke} = supply voltage on the choke inductor
C_1 = total cap at the PA output pin (The external C1 is reduced by the value of C_{pa} such that the total capacitance is the calculated value for C1)
f_o = center operation frequency
L_{choke} = RF choke inductor
R_L = load impedance needed to achieve desired output power

To achieve higher output powers the R_L valued tends to be lower. When this value is lower than the actual load (antenna) impedence, R_{ant}, the matching network shown in Figure 8 can be used and the values are calculated as shown here.

$$L_{match} = \frac{R_L}{2 \times \pi \times f_o} \times \sqrt{\frac{R_{ant}}{R_L} - 1} \quad \text{(eq. 6)}$$

$$C_{match} = \frac{1}{2 \times \pi \times f_o \times R_{ant}} \times \sqrt{\frac{R_{ant}}{R_L} - 1} \quad \text{(eq. 7)}$$

In practice L_2 and L_{match} could be combined into one inductor. The differential to single−ended conversion of the TX output is achieved via the Lsd and Csd components according to the following equations.

$$L_{SD} = \frac{\sqrt{R_S \times R_D}}{2 \times \pi \times f_o} \quad \text{(eq. 8)}$$

$$C_{SD} = \frac{1}{\sqrt{R_S \times R_D} \times 2 \times \pi \times f_o} \quad \text{(eq. 9)}$$

where Rs is the single−ended impedence and Rd is the differential impedence (50 Ω and 100 Ω respectively). The differential impedence is 100 Ω due to each side of the output presenting 50 Ω to gnd, and thus 100 differentially. In practice the initial component values are determined using these equations, but are then adjusted slightly for optimal performance and to account for board parasitics. Adding additional filtering components between the antenna and the single−ended output may be necessary to reduce harmonic content.

LNA Antenna Match

A single−ended to differential match for the LNA input shown above can be achieved using the following equations:

$$L_{R2} = \frac{\sqrt{Re(Z_L) \times R_{PLNA}}}{2 \times \pi \times f_o} \quad \text{(eq. 10)}$$

$$C_{R2} = \frac{1}{(2 \times \pi \times f_o)^2 \times L_{R2}} \quad \text{(eq. 11)}$$

$$C_{R1} = 2 \times C_{R2} \quad \text{(eq. 12)}$$

$$L_M = \frac{2 \times L_{R2}}{\left(\frac{2 \times I_M(Z_L)}{2 \times \pi \times f_o \times L_{R2}}\right) + 1} \quad \text{(eq. 13)}$$

$$L_{R1} = \frac{L_{LNA} \times L_M}{(L_{LNA} + L_M)} \quad \text{(eq. 14)}$$

$$L_{LNA} = \frac{1}{C_{PLNA} \times (2 \times \pi \times f_o)^2} \quad \text{(eq. 15)}$$

Where: R_{PLNA} = the parallel input resistance of the LNA (not the series) ~ 100 Ω
C_{PLNA} = the parallel input capacitance of the LNA (not the series) ~ 1 pF
$Re(Z_L)$ = real part of load or antenna impedance
$Im(Z_L)$ = imaginary part of load or antenna impedance

Using Direct RX/TX Connection

See Figure 9.

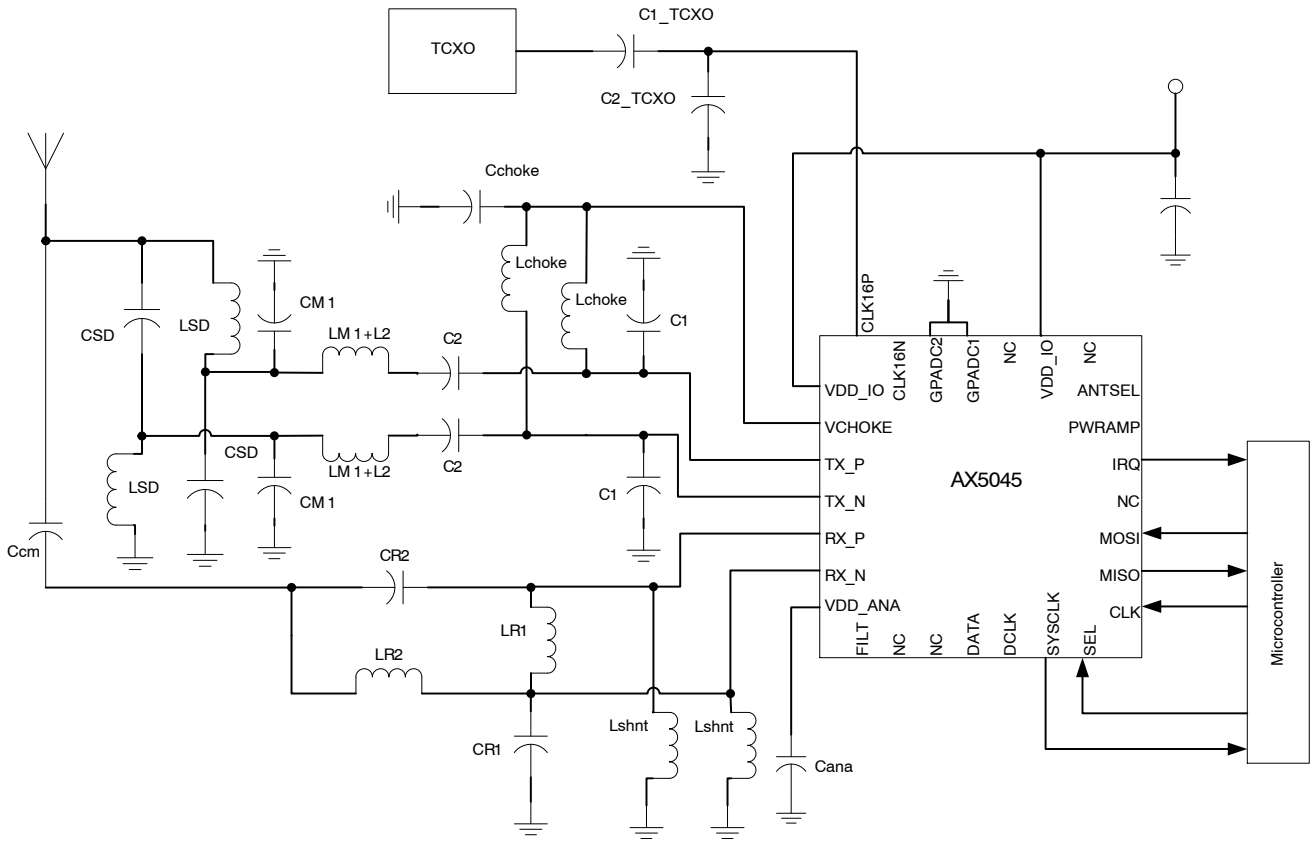

Figure 9. Typical Application Diagram with Single−ended Antenna, Differential Internal PA, without RX/TX Switch

PA/LNA Co−match

A co−match for the PA and LNA is possible with some compromise to performance as shown in Figure 9. A large coupling capacitor Ccm is used to connect them together. The initial values of the PA and LNA input matching components are calculated using the previous equations. However, these are just the starting values as they will actually put a null right at the resonant frequency for the PA output. A compromise must then be made between the PA and LNA performance by tweaking the PA and LNA component values. Typically this can be done by adjusting L2 and C1, but adjusting C2, CM1, LR1, and CR1 may also be necessary to acheive best performance.

Using Direct RX/TX Connection

See Figure 10.

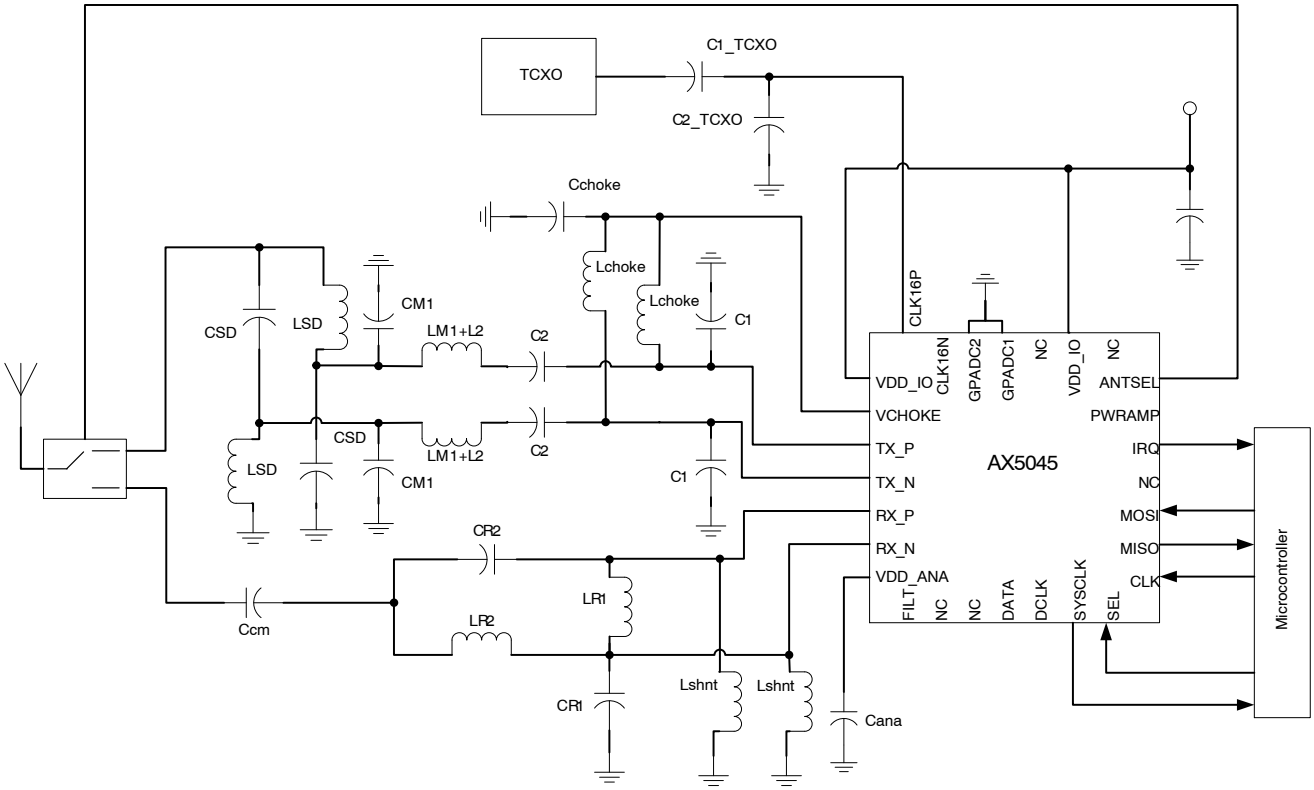

Figure 10. Typical Application Diagram with RX/TX Switch

QFN28 5x5, 0.5P
CASE 485EH
ISSUE A

DATE 25 NOV 2015

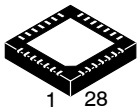

SCALE 2:1

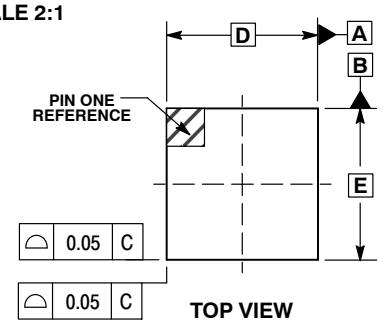

TOP VIEW

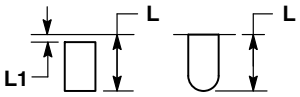

DETAIL A
ALTERNATE TERMINAL CONSTRUCTIONS

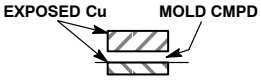

DETAIL B
ALTERNATE CONSTRUCTION

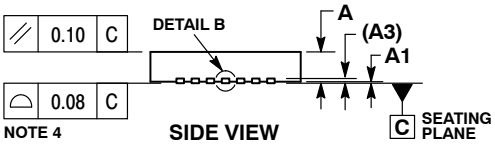

SIDE VIEW

NOTES:
1. DIMENSIONS AND TOLERANCING PER ASME Y14.5M, 1994.
2. CONTROLLING DIMENSION: MILLIMETERS.
3. DIMENSION b APPLIES TO PLATED TERMINAL AND IS MEASURED BETWEEN 0.15 AND 0.30MM FROM THE TERMINAL TIP.
4. COPLANARITY APPLIES TO THE EXPOSED PAD AS WELL AS THE TERMINALS.

	MILLIMETERS	
DIM	MIN	MAX
A	0.80	1.00
A1	0.00	0.05
A3	0.20 REF	
b	0.20	0.30
D	5.00 BSC	
D2	3.40	3.50
E	5.00 BSC	
E2	3.40	3.50
e	0.50 BSC	
L	0.44	0.54
L1	–––	0.15

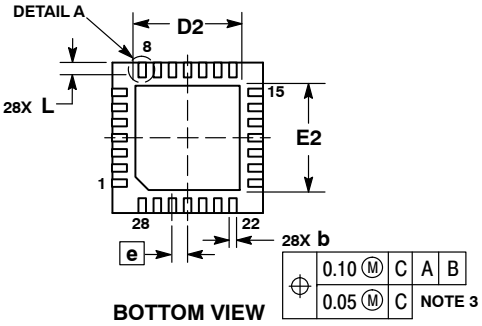

BOTTOM VIEW

GENERIC MARKING DIAGRAM*

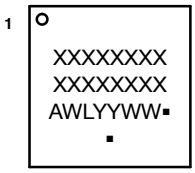

XXXXX = Specific Device Code
A = Assembly Location
WL = Wafer Lot
YY = Year
WW = Work Week
▪ = Pb−Free Package

*This information is generic. Please refer to device data sheet for actual part marking.
Pb−Free indicator, “G” or microdot “ ▪”, may or may not be present.

RECOMMENDED SOLDERING FOOTPRINT*

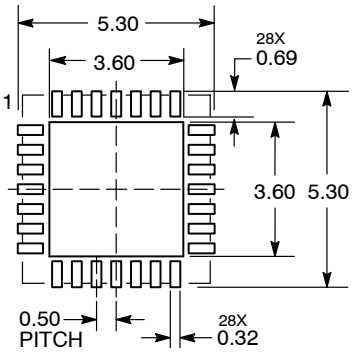

DIMENSION: MILLIMETERS

*For additional information on our Pb−Free strategy and soldering details, please download the ON Semiconductor Soldering and Mounting Techniques Reference Manual, SOLDERRM/D.

DOCUMENT NUMBER:	98AON04198G	Electronic versions are uncontrolled except when accessed directly from the Document Repository. Printed versions are uncontrolled except when stamped “CONTROLLED COPY” in red.
DESCRIPTION:	QFN28 5X5, 0.5P	PAGE 1 OF 1

ON Semiconductor and ON are trademarks of Semiconductor Components Industries, LLC dba ON Semiconductor or its subsidiaries in the United States and/or other countries. ON Semiconductor reserves the right to make changes without further notice to any products herein. ON Semiconductor makes no warranty, representation or guarantee regarding the suitability of its products for any particular purpose, nor does ON Semiconductor assume any liability arising out of the application or use of any product or circuit, and specifically disclaims any and all liability, including without limitation special, consequential or incidental damages. ON Semiconductor does not convey any license under its patent rights nor the rights of others.

© Semiconductor Components Industries, LLC, 2019

onsemi, onsemi, and other names, marks, and brands are registered and/or common law trademarks of Semiconductor Components Industries, LLC dba "**onsemi**" or its affiliates and/or subsidiaries in the United States and/or other countries. **onsemi** owns the rights to a number of patents, trademarks, copyrights, trade secrets, and other intellectual property. A listing of **onsemi**'s product/patent coverage may be accessed at www.onsemi.com/site/pdf/Patent−Marking.pdf. **onsemi** reserves the right to make changes at any time to any products or information herein, without notice. The information herein is provided "as−is" and **onsemi** makes no warranty, representation or guarantee regarding the accuracy of the information, product features, availability, functionality, or suitability of its products for any particular purpose, nor does **onsemi** assume any liability arising out of the application or use of any product or circuit, and specifically disclaims any and all liability, including without limitation special, consequential or incidental damages. Buyer is responsible for its products and applications using **onsemi** products, including compliance with all laws, regulations and safety requirements or standards, regardless of any support or applications information provided by **onsemi**. "Typical" parameters which may be provided in **onsemi** data sheets and/or specifications can and do vary in different applications and actual performance may vary over time. All operating parameters, including "Typicals" must be validated for each customer application by customer's technical experts. **onsemi** does not convey any license under any of its intellectual property rights nor the rights of others. **onsemi** products are not designed, intended, or authorized for use as a critical component in life support systems or any FDA Class 3 medical devices or medical devices with a same or similar classification in a foreign jurisdiction or any devices intended for implantation in the human body. Should Buyer purchase or use **onsemi** products for any such unintended or unauthorized application, Buyer shall indemnify and hold **onsemi** and its officers, employees, subsidiaries, affiliates, and distributors harmless against all claims, costs, damages, and expenses, and reasonable attorney fees arising out of, directly or indirectly, any claim of personal injury or death associated with such unintended or unauthorized use, even if such claim alleges that **onsemi** was negligent regarding the design or manufacture of the part. **onsemi** is an Equal Opportunity/Affirmative Action Employer. This literature is subject to all applicable copyright laws and is not for resale in any manner.

ADDITIONAL INFORMATION

TECHNICAL PUBLICATIONS:
Technical Library: www.onsemi.com/design/resources/technical−documentation
onsemi Website: www.onsemi.com

ONLINE SUPPORT: www.onsemi.com/support
For additional information, please contact your local Sales Representative at
www.onsemi.com/support/sales