Single 2-Input OR Gate

MC74VHC1G32, MC74VHC1GT32

The MC74VHC1G32 / MC74VHC1GT32 is a single 2−input OR Gate in tiny footprint packages. The MC74VHC1G32 has CMOS−level input thresholds while the MC74VHC1GT32 has TTL−level thresholds.

The input structures provide protection when voltages up to 5.5 V are applied, regardless of the supply voltage. This allows the device to be used to interface 5 V circuits to 3 V circuits. Some output structures also provide protection when V_{CC} = 0 V and when the output voltage exceeds V_{CC}. These input and output structures help prevent device destruction caused by supply voltage − input/output voltage mismatch, battery backup, hot insertion, etc.

Features

- Designed for 2.0 V to 5.5 V V_{CC} Operation
- 3.7 ns t_{PD} at 5 V (typ)
- Inputs/Outputs Over−Voltage Tolerant up to 5.5 V
- I_{OFF} Supports Partial Power Down Protection
- Source/Sink 8 mA at 3.0 V
- Available in SC−88A, SC−74A, SOT−953 and UDFN6 Packages
- Chip Complexity < 100 FETs
- −Q Suffix for Automotive and Other Applications Requiring Unique Site and Control Change Requirements; AEC−Q100 Qualified and PPAP Capable
- These Devices are Pb−Free, Halogen Free/BFR Free and are RoHS Compliant

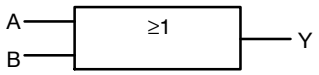

Figure 1. Logic Symbol

MARKING DIAGRAMS

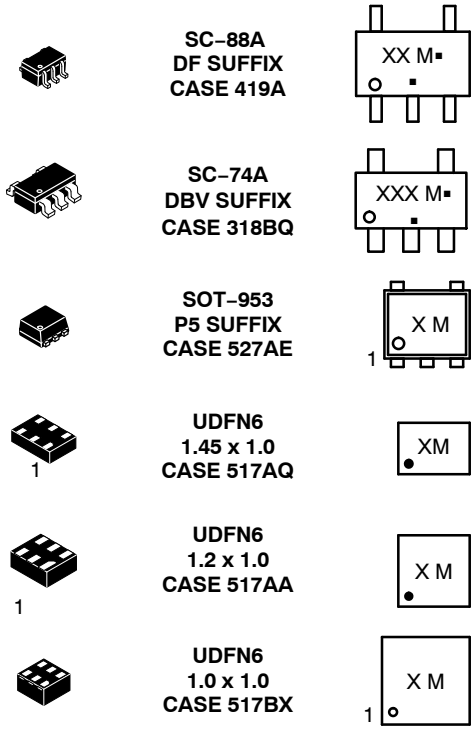

XX = Specific Device Code
M = Date Code*
▪ = Pb−Free Package

(Note: Microdot may be in either location)

*Date Code orientation and/or position may vary depending upon manufacturing location.

ORDERING INFORMATION

See detailed ordering, marking and shipping information in the package dimensions section on page 7 of this data sheet.

© Semiconductor Components Industries, LLC, 2011

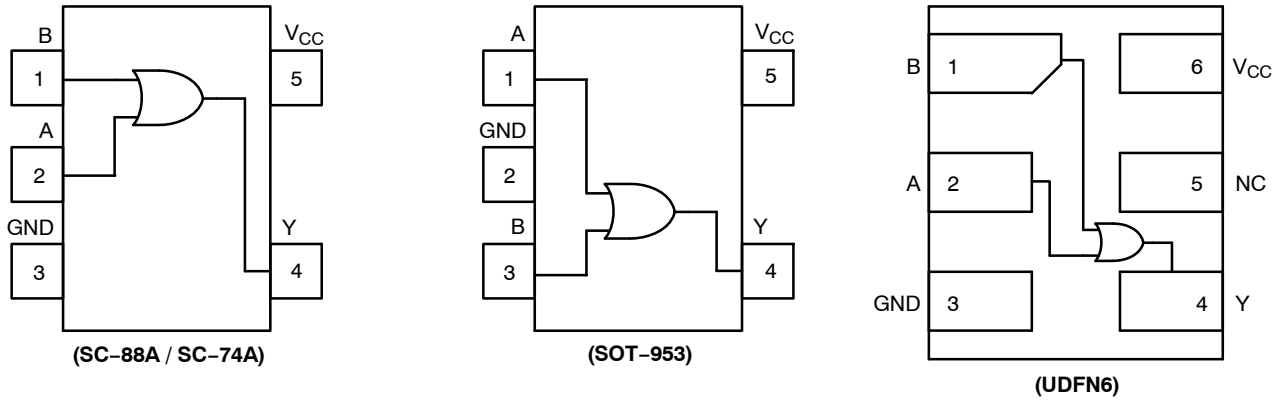

Figure 2. Pinout (Top View)

PIN ASSIGNMENT
(SC−88A / SC−74A)

Pin	Function
1	B
2	A
3	GND
4	Y
5	V_{CC}

PIN ASSIGNMENT (SOT−953)

Pin	Function
1	A
2	GND
3	B
4	Y
5	V_{CC}

PIN ASSIGNMENT (UDFN)

Pin	Function
1	B
2	A
3	GND
4	Y
5	NC
6	V_{CC}

FUNCTION TABLE

Input		Output
A	**B**	**Y**
L	L	L
L	H	H
H	L	H
H	H	H

MAXIMUM RATINGS

Symbol	Characteristics		Value	Unit
V_{CC}	DC Supply Voltage		−0.5 to +6.5	V
V_{IN}	DC Input Voltage		−0.5 to +6.5	V
V_{OUT}	DC Output Voltage	Active−Mode (High or Low State) Tri−State Mode (Note 1) Power−Down Mode (V_{CC} = 0 V)	−0.5 to V_{CC} + 0.5 −0.5 to +6.5 −0.5 to +6.5	V
I_{IK}	DC Input Diode Current	V_{IN} < GND	−20	mA
I_{OK}	DC Output Diode Current	V_{OUT} < GND	−20	mA
I_{OUT}	DC Output Source/Sink Current		±25	mA
I_{CC} or I_{GND}	DC Supply Current per Supply Pin or Ground Pin		±50	mA
T_{STG}	Storage Temperature Range		−65 to +150	°C
T_L	Lead Temperature, 1 mm from Case for 10 secs		260	°C
T_J	Junction Temperature Under Bias		+150	°C
θ_{JA}	Thermal Resistance (Note 2)	SC−88A SC−74A SOT−553 SOT−953 UDFN6	377 320 324 254 154	°C/W
P_D	Power Dissipation in Still Air	SC−88A SC−74A SOT−553 SOT−953 UDFN6	332 390 386 491 812	mW
MSL	Moisture Sensitivity		Level 1	−
F_R	Flammability Rating	Oxygen Index: 28 to 34	UL 94 V−0 @ 0.125 in	−
V_{ESD}	ESD Withstand Voltage (Note 3)	Human Body Model Charged Device Model	2000 1000	V
$I_{Latchup}$	Latchup Performance (Note 4)		±100	mA

Stresses exceeding those listed in the Maximum Ratings table may damage the device. If any of these limits are exceeded, device functionality should not be assumed, damage may occur and reliability may be affected.

1. Applicable to devices with outputs that may be tri−stated.
2. Measured with minimum pad spacing on an FR4 board, using 10mm−by−1inch, 2 ounce copper trace no air flow per JESD51−7.
3. HBM tested to ANSI/ESDA/JEDEC JS−001−2017. CDM tested to EIA/JESD22−C101−F. JEDEC recommends that ESD qualification to EIA/JESD22−A115−A (Machine Model) be discontinued per JEDEC/JEP172A.
4. Tested to EIA/JESD78 Class II.

RECOMMENDED OPERATING CONDITIONS

Symbol	Characteristics		Min	Max	Unit
V_{CC}	Positive DC Supply Voltage		2.0	5.5	V
V_{IN}	DC Input Voltage		0	5.5	V
V_{OUT}	DC Output Voltage	Active−Mode (High or Low State) Tri−State Mode (Note 1) Power−Down Mode (V_{CC} = 0 V)	0 0 0	V_{CC} 5.5 5.5	V
T_A	Operating Temperature Range		−55	+125	°C
t_r , t_f	Input Rise and Fall Time	V_{CC} = 2.0 V V_{CC} = 2.3 V to 2.7 V V_{CC} = 3.0 V to 3.6 V V_{CC} = 4.5 V to 5.5 V	0 0 0 0	20 20 10 5	ns/V

Functional operation above the stresses listed in the Recommended Operating Ranges is not implied. Extended exposure to stresses beyond the Recommended Operating Ranges limits may affect device reliability.

DC ELECTRICAL CHARACTERISTICS (MC74VHC1G32)

Symbol	Parameter	Test Conditions	V_{CC} (V)	T_A = 25°C			−40°C ≤ T_A ≤ 85°C		−55°C ≤ T_A ≤ 125°C		Unit
				Min	Typ	Max	Min	Max	Min	Max	
V_{IH}	High−Level Input Voltage		2.0	1.5			1.5		1.5		V
			3.0	2.1			2.1		2.1		
			4.5	3.15			3.15		3.15		
			5.5	3.85			3.85		3.85		
V_{IL}	Low−Level Input Voltage		2.0			0.5		0.5		0.5	V
			3.0			0.9		0.9		0.9	
			4.5			1.35		1.35		1.35	
			5.5			1.65		1.65		1.65	
V_{OH}	High−Level Output Voltage	V_{IN} = V_{IH} or V_{IL} I_{OH} = −50 μA I_{OH} = −50 μA I_{OH} = −50 μA I_{OH} = −4 mA I_{OH} = −8 mA	 2.0 3.0 4.5 3.0 4.5	 1.9 2.9 4.4 2.58 3.94	 2.0 3.0 4.5		 1.9 2.9 4.4 2.48 3.80		 1.9 2.9 4.4 2.34 3.66		V
V_{OL}	Low−Level Output Voltage	V_{IN} = V_{IH} or V_{IL} I_{OL} = 50 μA I_{OL} = 50 μA I_{OL} = 50 μA I_{OL} = 4 mA I_{OL} = 8 mA	 2.0 3.0 4.5 3.0 4.5		 0.0 0.0 0.0	 0.1 0.1 0.1 0.36 0.36		 0.1 0.1 0.1 0.44 0.44		 0.1 0.1 0.1 0.52 0.52	V
I_{IN}	Input Leakage Current	V_{IN} = 5.5 V or GND	2.0 to 5.5			±0.1		±1.0		±1.0	μA
I_{OFF}	Power Off Leakage Current	V_{IN} = 5.5 V or V_{OUT} = 5.5 V	0.0	–	–	1.0	–	10	–	10	μA
I_{CC}	Quiescent Supply Current	V_{IN} = V_{CC} or GND	5.5			1.0		20		40	μA

DC ELECTRICAL CHARACTERISTICS (MC74VHC1GT32)

Symbol	Parameter	Test Conditions	V_{CC} (V)	T_A = 25°C			−40°C ≤ T_A ≤ 85°C		−55°C ≤ T_A ≤ 125°C		Unit
				Min	Typ	Max	Min	Max	Min	Max	
V_{IH}	High−Level Input Voltage		2.0	1.0			1.0		1.0		V
			3.0	1.4			1.4		1.4		
			4.5	2.0			2.0		2.0		
			5.5	2.0			2.0		2.0		
V_{IL}	Low−Level Input Voltage		2.0			0.28		0.28		0.28	V
			3.0			0.45		0.45		0.45	
			4.5			0.8		0.8		0.8	
			5.5			0.8		0.8		0.8	
V_{OH}	High−Level Output Voltage	$V_{IN} = V_{IH}$ or V_{IL} $I_{OH} = -50\ \mu A$ $I_{OH} = -50\ \mu A$ $I_{OH} = -50\ \mu A$ $I_{OH} = -4$ mA $I_{OH} = -8$ mA	 2.0 3.0 4.5 3.0 4.5	 1.9 2.9 4.4 2.58 3.94	 2.0 3.0 4.5		 1.9 2.9 4.4 2.48 3.80		 1.9 2.9 4.4 2.34 3.66		V
V_{OL}	Low−Level Output Voltage	$V_{IN} = V_{IH}$ or V_{IL} $I_{OL} = 50\ \mu A$ $I_{OL} = 50\ \mu A$ $I_{OL} = 50\ \mu A$ $I_{OL} = 4$ mA $I_{OL} = 8$ mA	 2.0 3.0 4.5 3.0 4.5		 0.0 0.0 0.0	 0.1 0.1 0.1 0.36 0.36		 0.1 0.1 0.1 0.44 0.44		 0.1 0.1 0.1 0.52 0.52	V
I_{IN}	Input Leakage Current	V_{IN} = 5.5 V or GND	2.0 to 5.5			±0.1		±1.0		±1.0	μA
I_{OFF}	Power Off Leakage Current	V_{IN} = 5.5 V or V_{OUT} = 5.5 V	0			1.0		10		10	μA
I_{CC}	Quiescent Supply Current	$V_{IN} = V_{CC}$ or GND	5.5			1.0		20		40	μA
I_{CCT}	Increase in Quiescent Supply Current per Input Pin	One Input: V_{IN} = 3.4 V; Other Input at V_{CC} or GND	5.5			1.35		1.5		1.65	mA

AC ELECTRICAL CHARACTERISTICS

Symbol	Parameter	Conditions	V_{CC} (V)	T_A = 25°C			−40°C ≤ T_A ≤ 85°C		−55°C ≤ T_A ≤ 125°C		Unit
				Min	Typ	Max	Min	Max	Min	Max	
t_{PLH}, t_{PHL}	Propagation Delay, A to Y (Figures 3 and 4)	C_L = 15 pF	3.0 to 3.6		4.8	7.9		9.5		11.5	ns
		C_L = 50 pF			6.1	11.4		13.0		15.5	
		C_L = 15 pF	4.5 to 5.5		3.7	5.5		6.5		8.0	
		C_L = 50 pF			4.4	7.5		8.5		10.0	
C_{IN}	Input Capacitance				4.0	10		10		10	pF
C_{OUT}	Output Capacitance	Output in High Impedance State			6.0						pF

		Typical @ 25°C, V_{CC} = 5.0 V	
C_{PD}	Power Dissipation Capacitance (Note 5)	8.0	pF

5. C_{PD} is defined as the value of the internal equivalent capacitance which is calculated from the operating current consumption without load. Average operating current can be obtained by the equation: $I_{CC(OPR)} = C_{PD} \bullet V_{CC} \bullet f_{in} + I_{CC}$. C_{PD} is used to determine the no−load dynamic power consumption; $P_D = C_{PD} \bullet V_{CC}^2 \bullet f_{in} + I_{CC} \bullet V_{CC}$.

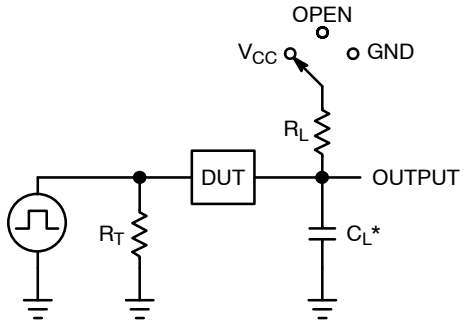

C_L includes probe and jig capacitance
R_T is Z_{OUT} of pulse generator (typically 50 Ω)
f = 1 MHz

Figure 3. Test Circuit

Test	Switch Position	C_L, pF	R_L, Ω
t_{PLH} / t_{PHL}	Open	See AC Characteristics Table	X
t_{PLZ} / t_{PZL}	V_{CC}		1 k
t_{PHZ} / t_{PZH}	GND		1 k

X = Don't Care

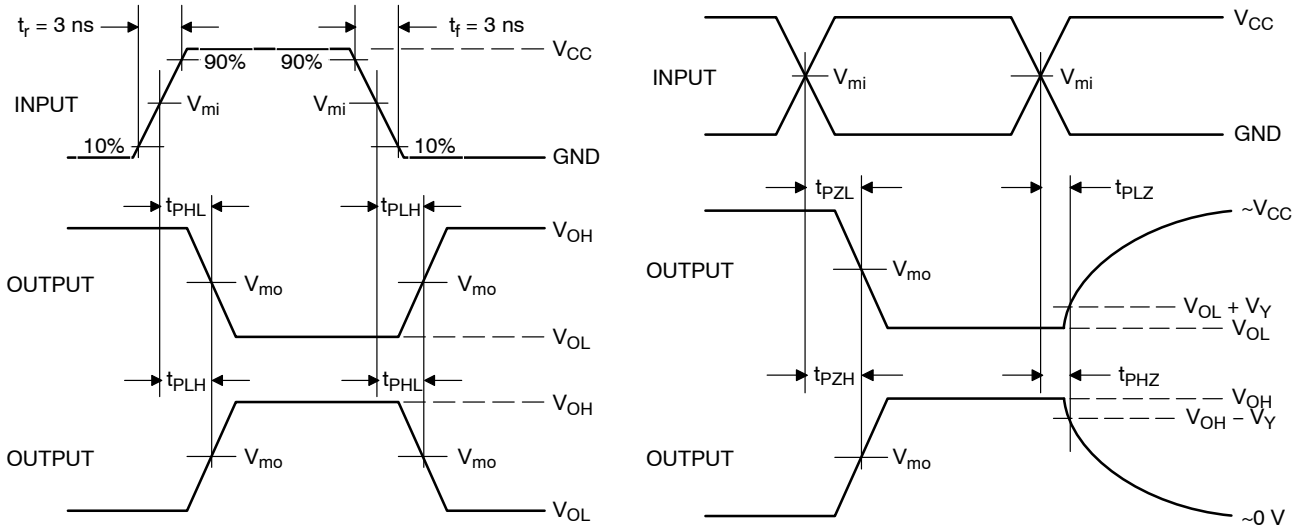

Figure 4. Switching Waveforms

V_{CC}, V	V_{mi}, V	V_{mo}, V		V_Y, V
		t_{PLH}, t_{PHL}	t_{PZL}, t_{PLZ}, t_{PZH}, t_{PHZ}	
3.0 to 3.6	$V_{CC}/2$	$V_{CC}/2$	$V_{CC}/2$	0.3
4.5 to 5.5	$V_{CC}/2$	$V_{CC}/2$	$V_{CC}/2$	0.3

ORDERING INFORMATION

Device	Packages	Specific Device Code	Pin 1 Orientation (See below)	Shipping†
MC74VHC1G32DFT1G	SC−88A	V4	Q2	3000 / Tape & Reel
MC74VHC1G32DFT2G	SC−88A	V4	Q4	3000 / Tape & Reel
MC74VHC1G32DFT1G−Q*	SC−88A	V4	Q2	3000 / Tape & Reel
MC74VHC1G32DFT2G−Q*	SC−88A	V4	Q4	3000 / Tape & Reel
MC74VHC1GT32DFT1G	SC−88A	VN	Q2	3000 / Tape & Reel
MC74VHC1GT32DFT2G	SC−88A	VN	Q4	3000 / Tape & Reel
MC74VHC1GT32DFT2G−Q*	SC−88A	VN	Q4	3000 / Tape & Reel
MC74VHC1GT32DFT1G−Q*	SC−88A	VN	Q2	3000 / Tape & Reel
MC74VHC1G32DBVT1G	SC−74A	V4	Q4	3000 / Tape & Reel
MC74VHC1GT32DBVT1G	SC−74A	VN	Q4	3000 / Tape & Reel
MC74VHC1G32P5T5G	SOT−953	F	Q2	8000 / Tape & Reel
MC74VHC1GT32P5T5G	SOT−953	Q	Q2	8000 / Tape & Reel
MC74VHC1G32MU1TCG	UDFN6, 1.45 x 1.0, 0.5P	3 (Rotated 90° CW)	Q4	3000 / Tape & Reel
MC74VHC1GT32MU1TCG (Contact **onsemi**)	UDFN6, 1.45 x 1.0, 0.5P	T (Rotated 180° CW)	Q4	3000 / Tape & Reel
MC74VHC1G32MU2TCG	UDFN6, 1.2 x 1.0, 0.4P	3	Q4	3000 / Tape & Reel
MC74VHC1GT32MU2TCG (Contact **onsemi**)	UDFN6, 1.2 x 1.0, 0.4P	5	Q4	3000 / Tape & Reel
MC74VHC1G32MU3TCG	UDFN6, 1.0 x 1.0, 0.35P	F (Rotated 180° CW)	Q4	3000 / Tape & Reel
MC74VHC1GT32MU3TCG (Contact **onsemi**)	UDFN6, 1.0 x 1.0, 0.35P	Q	Q4	3000 / Tape & Reel

†For information on tape and reel specifications, including part orientation and tape sizes, please refer to our Tape and Reel Packaging Specifications Brochure, BRD8011/D.

*−Q Suffix for Automotive and Other Applications Requiring Unique Site and Control Change Requirements; AEC−Q100 Qualified and PPAP Capable.

Pin 1 Orientation in Tape and Reel

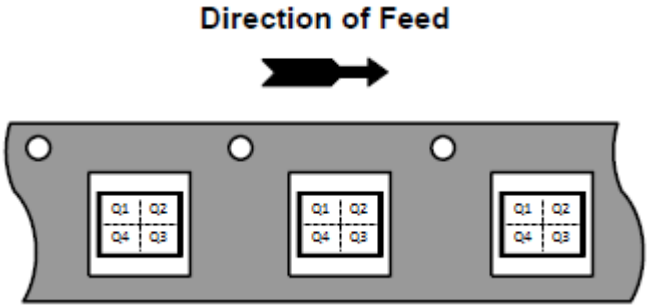

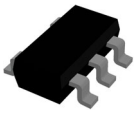

SC−74A−5 3.00x1.50x0.95, 0.95P
CASE 318BQ
ISSUE C

DATE 26 FEB 2024

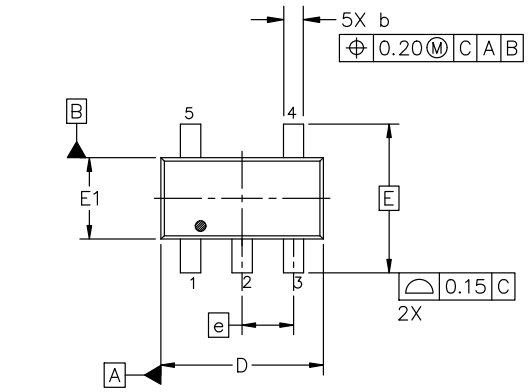

TOP VIEW

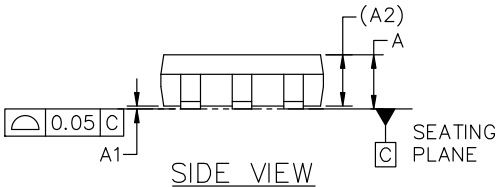

SIDE VIEW

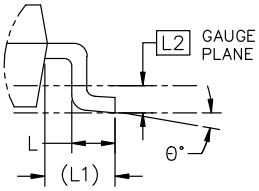

DETAIL "A"
SCALE 2:1

NOTES:

1. DIMENSIONING AND TOLERANCING CONFORM TO ASME Y14.5−2018.
2. ALL DIMENSION ARE IN MILLIMETERS (ANGLES IN DEGREES).
3. MAXIMUM LEAD THICKNESS INCLUDES LEAD FINISH THICKNESS. MINIMUM LEAD THICKNESS IS THE MINIMUM THICKNESS OF BASE MATERIAL.
4. DIMENSIONS D AND E1 DO NOT INCLUDE MOLD FLASH, PROTRUSIONS OF GATE BURRS. MOLD FLASH, PROTRUSIONS, OR GATE BURRS SHALL NOT EXCEED 0.15 PER SIDE.

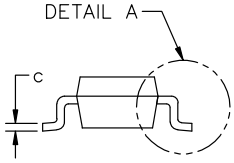

END VIEW

DIM	MILLIMETERS		
	MIN.	NOM.	MAX.
A	0.90	1.00	1.10
A1	0.01	0.18	0.10
A2	0.95 REF.		
b	0.25	0.37	0.50
c	0.10	0.18	0.26
D	2.85	3.00	3.15
E	2.75 BSC		
E1	1.35	1.50	1.65
e	0.95 BSC		
L	0.20	0.40	0.60
L1	0.62 REF.		
L2	0.25 BSC		
θ	0°	5°	10°

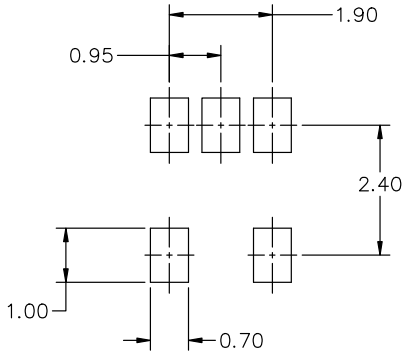

RECOMMENDED MOUNTING FOOTPRINT*

* FOR ADDITIONAL INFORMATION ON OUR Pb−FREE STRATEGY AND SOLDERING DETAILS, PLEASE DOWNLOAD THE ON SEMICONDUCTOR SOLDERING AND MOUNTING TECHNIQUES REFERENCE MANUAL, SOLDERRM/D.

GENERIC MARKING DIAGRAM*

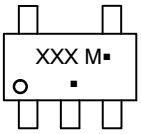

XXX = Specific Device Code
M = Date Code
▪ = Pb−Free Package

(Note: Microdot may be in either location)

*This information is generic. Please refer to device data sheet for actual part marking. Pb−Free indicator, "G" or microdot " ▪", may or may not be present. Some products may not follow the Generic Marking.

DOCUMENT NUMBER:	98AON66279G	Electronic versions are uncontrolled except when accessed directly from the Document Repository. Printed versions are uncontrolled except when stamped "CONTROLLED COPY" in red.	
DESCRIPTION:	SC−74A−5 3.00x1.50x0.95, 0.95P		PAGE 1 OF 1

onsemi and onsemi are trademarks of Semiconductor Components Industries, LLC dba **onsemi** or its subsidiaries in the United States and/or other countries. **onsemi** reserves the right to make changes without further notice to any products herein. **onsemi** makes no warranty, representation or guarantee regarding the suitability of its products for any particular purpose, nor does **onsemi** assume any liability arising out of the application or use of any product or circuit, and specifically disclaims any and all liability, including without limitation special, consequential or incidental damages. **onsemi** does not convey any license under its patent rights nor the rights of others.

SC−88A (SC−70−5/SOT−353)
CASE 419A−02
ISSUE M

SCALE 2:1

DATE 11 APR 2023

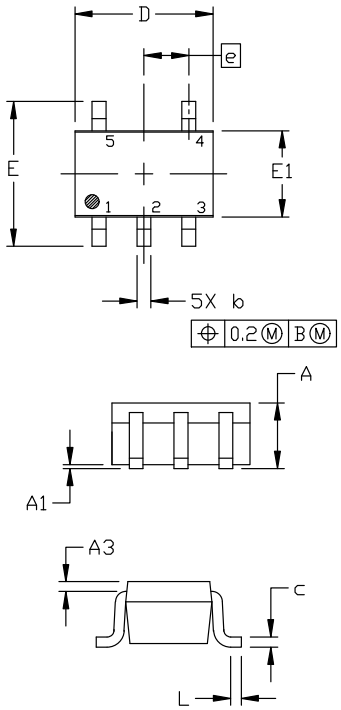

NOTES:

1. DIMENSIONING AND TOLERANCING PER ANSI Y14.5M, 1982.
2. CONTROLLING DIMENSION: MILLIMETERS
3. 419A−01 OBSOLETE. NEW STANDARD 419A−02
4. DIMENSIONS D AND E1 DO NOT INCLUDE MOLD FLASH, PROTRUSIONS, OR GATE BURRS. MOLD FLASH, PROTRUSIONS, OR GATE BURRS SHALL NOT EXCEED 0.1016MM PER SIDE.

DIM	MILLIMETERS		
	MIN.	NOM.	MAX.
A	0.80	0.95	1.10
A1	---	---	0.10
A3	0.20 REF		
b	0.10	0.20	0.30
c	0.10	---	0.25
D	1.80	2.00	2.20
E	2.00	2.10	2.20
E1	1.15	1.25	1.35
e	0.65 BSC		
L	0.10	0.15	0.30

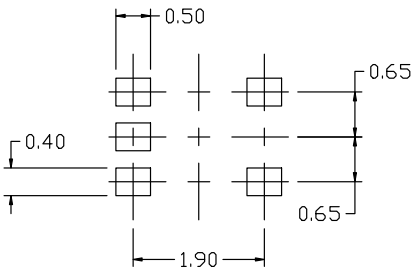

RECOMMENDED
MOUNTING FOOTPRINT

* For additional information on our Pb−Free strategy and soldering details, please download the ON Semiconductor Soldering and Mounting Techniques Reference Manual, SOLDERRM/D.

GENERIC MARKING DIAGRAM*

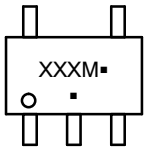

*This information is generic. Please refer to device data sheet for actual part marking. Pb−Free indicator, "G" or microdot "▪", may or may not be present. Some products may not follow the Generic Marking.

XXX = Specific Device Code
M = Date Code
▪ = Pb−Free Package
(Note: Microdot may be in either location)

STYLE 1:
PIN 1. BASE
2. EMITTER
3. BASE
4. COLLECTOR
5. COLLECTOR

STYLE 2:
PIN 1. ANODE
2. EMITTER
3. BASE
4. COLLECTOR
5. CATHODE

STYLE 3:
PIN 1. ANODE 1
2. N/C
3. ANODE 2
4. CATHODE 2
5. CATHODE 1

STYLE 4:
PIN 1. SOURCE 1
2. DRAIN 1/2
3. SOURCE 1
4. GATE 1
5. GATE 2

STYLE 5:
PIN 1. CATHODE
2. COMMON ANODE
3. CATHODE 2
4. CATHODE 3
5. CATHODE 4

STYLE 6:
PIN 1. EMITTER 2
2. BASE 2
3. EMITTER 1
4. COLLECTOR
5. COLLECTOR 2/BASE 1

STYLE 7:
PIN 1. BASE
2. EMITTER
3. BASE
4. COLLECTOR
5. COLLECTOR

STYLE 8:
PIN 1. CATHODE
2. COLLECTOR
3. N/C
4. BASE
5. EMITTER

STYLE 9:
PIN 1. ANODE
2. CATHODE
3. ANODE
4. ANODE
5. ANODE

Note: Please refer to datasheet for style callout. If style type is not called out in the datasheet refer to the device datasheet pinout or pin assignment.

DOCUMENT NUMBER:	98ASB42984B	Electronic versions are uncontrolled except when accessed directly from the Document Repository. Printed versions are uncontrolled except when stamped "CONTROLLED COPY" in red.
DESCRIPTION:	SC−88A (SC−70−5/SOT−353)	PAGE 1 OF 1

onsemi and onsemi are trademarks of Semiconductor Components Industries, LLC dba **onsemi** or its subsidiaries in the United States and/or other countries. **onsemi** reserves the right to make changes without further notice to any products herein. **onsemi** makes no warranty, representation or guarantee regarding the suitability of its products for any particular purpose, nor does **onsemi** assume any liability arising out of the application or use of any product or circuit, and specifically disclaims any and all liability, including without limitation special, consequential or incidental damages. **onsemi** does not convey any license under its patent rights nor the rights of others.

UDFN6, 1.2x1.0, 0.4P
CASE 517AA
ISSUE D

DATE 03 SEP 2010

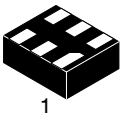

1

SCALE 8:1

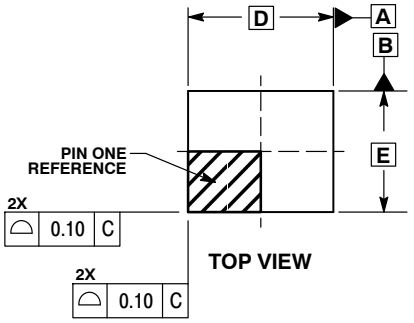

TOP VIEW

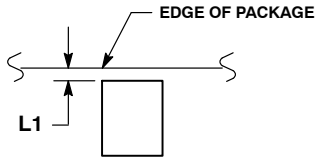

DETAIL A
Bottom View
(Optional)

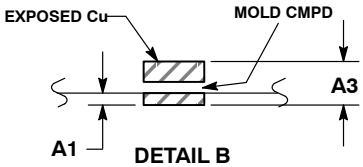

DETAIL B
Side View
(Optional)

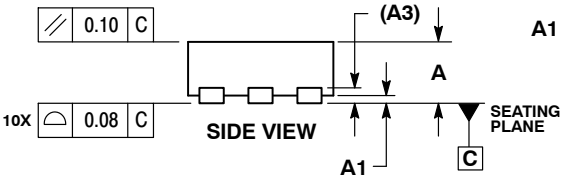

SIDE VIEW

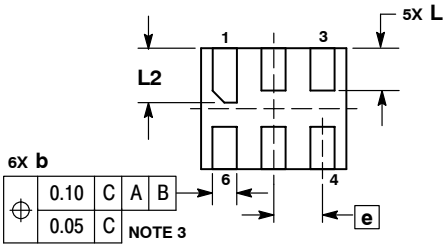

BOTTOM VIEW

NOTES:
1. DIMENSIONING AND TOLERANCING PER ASME Y14.5M, 1994.
2. CONTROLLING DIMENSION: MILLIMETERS.
3. DIMENSION b APPLIES TO PLATED TERMINAL AND IS MEASURED BETWEEN 0.25 AND 0.30 mm FROM TERMINAL.
4. COPLANARITY APPLIES TO THE EXPOSED PAD AS WELL AS THE TERMINALS.

	MILLIMETERS	
DIM	MIN	MAX
A	0.45	0.55
A1	0.00	0.05
A3	0.127 REF	
b	0.15	0.25
D	1.20 BSC	
E	1.00 BSC	
e	0.40 BSC	
L	0.30	0.40
L1	0.00	0.15
L2	0.40	0.50

GENERIC
MARKING DIAGRAM*

X = Specific Device Code
M = Date Code

*This information is generic. Please refer to device data sheet for actual part marking. Pb−Free indicator, “G” or microdot “ ▪”, may or may not be present.

MOUNTING FOOTPRINT*

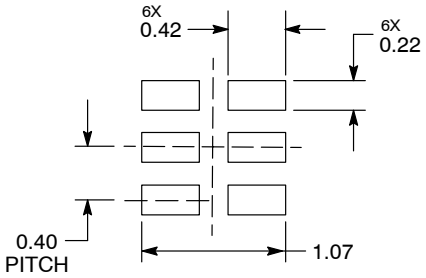

DIMENSIONS: MILLIMETERS

*For additional information on our Pb−Free strategy and soldering details, please download the ON Semiconductor Soldering and Mounting Techniques Reference Manual, SOLDERRM/D.

DOCUMENT NUMBER:	**98AON22068D**	Electronic versions are uncontrolled except when accessed directly from the Document Repository. Printed versions are uncontrolled except when stamped “CONTROLLED COPY” in red.
DESCRIPTION:	**6 PIN UDFN, 1.2X1.0, 0.4P**	**PAGE 1 OF 1**

onsemi and onsemi are trademarks of Semiconductor Components Industries, LLC dba **onsemi** or its subsidiaries in the United States and/or other countries. **onsemi** reserves the right to make changes without further notice to any products herein. **onsemi** makes no warranty, representation or guarantee regarding the suitability of its products for any particular purpose, nor does **onsemi** assume any liability arising out of the application or use of any product or circuit, and specifically disclaims any and all liability, including without limitation special, consequential or incidental damages. **onsemi** does not convey any license under its patent rights nor the rights of others.

UDFN6, 1.45x1.0, 0.5P
CASE 517AQ
ISSUE O

1

SCALE 4:1

DATE 15 MAY 2008

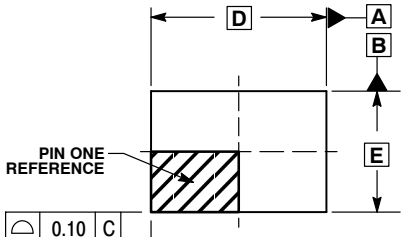

TOP VIEW

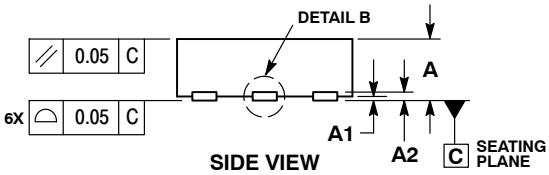

SIDE VIEW

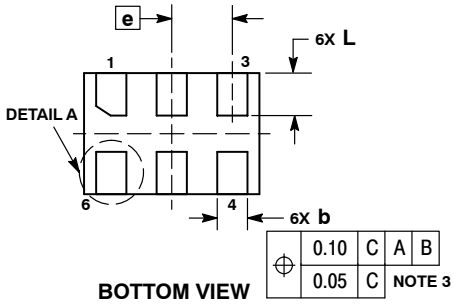

BOTTOM VIEW

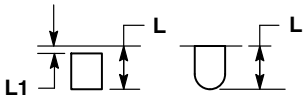

DETAIL A
OPTIONAL CONSTRUCTIONS

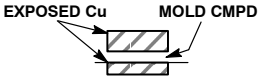

DETAIL B
OPTIONAL CONSTRUCTIONS

NOTES:
1. DIMENSIONING AND TOLERANCING PER ASME Y14.5M, 1994.
2. CONTROLLING DIMENSION: MILLIMETERS.
3. DIMENSION b APPLIES TO PLATED TERMINAL AND IS MEASURED BETWEEN 0.15 AND 0.30 mm FROM THE TERMINAL TIP.

	MILLIMETERS	
DIM	MIN	MAX
A	0.45	0.55
A1	0.00	0.05
A2	0.07 REF	
b	0.20	0.30
D	1.45 BSC	
E	1.00 BSC	
e	0.50 BSC	
L	0.30	0.40
L1	---	0.15

MOUNTING FOOTPRINT

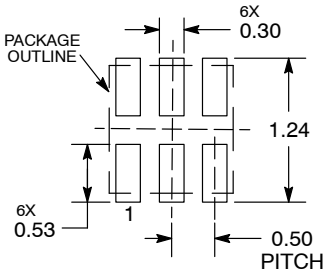

DIMENSIONS: MILLIMETERS

*For additional information on our Pb−Free strategy and soldering details, please download the **onsemi** Soldering and Mounting Techniques Reference Manual, SOLDERRM/D.

GENERIC MARKING DIAGRAM*

X = Specific Device Code
M = Date Code

*This information is generic. Please refer to device data sheet for actual part marking. Pb−Free indicator, “G” or microdot “ ▪”, may or may not be present.

DOCUMENT NUMBER:	**98AON30313E**	Electronic versions are uncontrolled except when accessed directly from the Document Repository. Printed versions are uncontrolled except when stamped “CONTROLLED COPY” in red.
DESCRIPTION:	**UDFN6, 1.45x1.0, 0.5P**	**PAGE 1 OF 1**

onsemi and onsemi are trademarks of Semiconductor Components Industries, LLC dba **onsemi** or its subsidiaries in the United States and/or other countries. **onsemi** reserves the right to make changes without further notice to any products herein. **onsemi** makes no warranty, representation or guarantee regarding the suitability of its products for any particular purpose, nor does **onsemi** assume any liability arising out of the application or use of any product or circuit, and specifically disclaims any and all liability, including without limitation special, consequential or incidental damages. **onsemi** does not convey any license under its patent rights nor the rights of others.

UDFN6, 1x1, 0.35P
CASE 517BX
ISSUE O

SCALE 4:1

DATE 18 MAY 2011

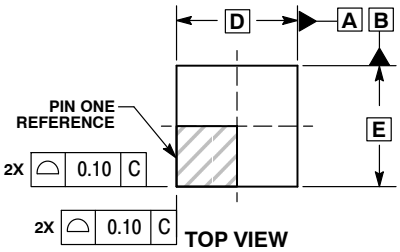

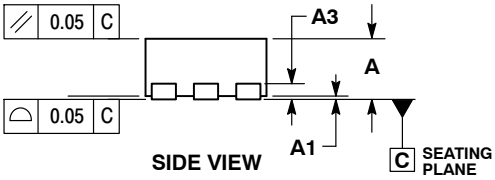

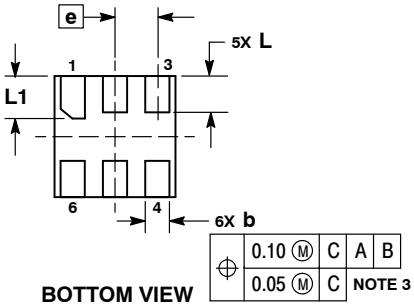

NOTES:
1. DIMENSIONING AND TOLERANCING PER ASME Y14.5M, 1994.
2. CONTROLLING DIMENSION: MILLIMETERS.
3. DIMENSION b APPLIES TO PLATED TERMINAL AND IS MEASURED BETWEEN 0.15 AND 0.20 MM FROM TERMINAL TIP.
4. PACKAGE DIMENSIONS EXCLUSIVE OF BURRS AND MOLD FLASH.

	MILLIMETERS	
DIM	MIN	MAX
A	0.45	0.55
A1	0.00	0.05
A3	0.13 REF	
b	0.12	0.22
D	1.00 BSC	
E	1.00 BSC	
e	0.35 BSC	
L	0.25	0.35
L1	0.30	0.40

RECOMMENDED SOLDERING FOOTPRINT*

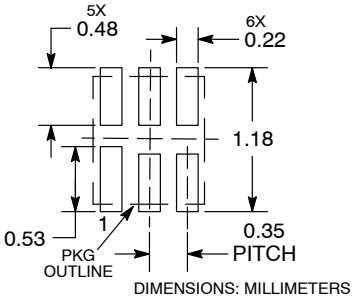

*For additional information on our Pb−Free strategy and soldering details, please download the **onsemi** Soldering and Mounting Techniques Reference Manual, SOLDERRM/D.

GENERIC MARKING DIAGRAM*

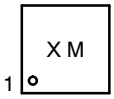

X = Specific Device Code
M = Date Code

*This information is generic. Please refer to device data sheet for actual part marking. Pb−Free indicator, “G” or microdot “▪”, may or may not be present. Some products may not follow the Generic Marking.

DOCUMENT NUMBER:	**98AON56787E**	Electronic versions are uncontrolled except when accessed directly from the Document Repository. Printed versions are uncontrolled except when stamped “CONTROLLED COPY” in red.
DESCRIPTION:	**UDFN6, 1x1, 0.35P**	**PAGE 1 OF 1**

onsemi and onsemi are trademarks of Semiconductor Components Industries, LLC dba **onsemi** or its subsidiaries in the United States and/or other countries. **onsemi** reserves the right to make changes without further notice to any products herein. **onsemi** makes no warranty, representation or guarantee regarding the suitability of its products for any particular purpose, nor does **onsemi** assume any liability arising out of the application or use of any product or circuit, and specifically disclaims any and all liability, including without limitation special, consequential or incidental damages. **onsemi** does not convey any license under its patent rights nor the rights of others.

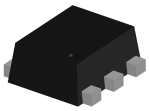

SOT−953 1.00x0.80x0.37, 0.35P
CASE 527AE
ISSUE F

DATE 17 JAN 2024

NOTES:
1. DIMENSIONING AND TOLERANCING PER ASME Y14.5M, 2018.
2. CONTROLLING DIMENSION: MILLIMETERS.
3. MAXIMUM LEAD THICKNESS INCLUDES LEAD FINISH. MINIMUM LEAD THICKNESS IS THE MINIMUM THICKNESS OF THE BASE MATERIAL.
4. DIMENSIONS D AND E DO NOT INCLUDE MOLD FLASH, PROTRUSIONS, OR GATE BURRS.

MILLIMETERS			
DIM	MIN	NOM	MAX
A	0.34	0.37	0.40
b	0.10	0.15	0.20
C	0.07	0.12	0.17
D	0.95	1.00	1.05
E	0.75	0.80	0.85
e	0.35 BSC		
H	0.95	1.00	1.05
L	0.125	0.175	0.225
L2	0.05	0.10	0.15
L3	0.075 (REF)		

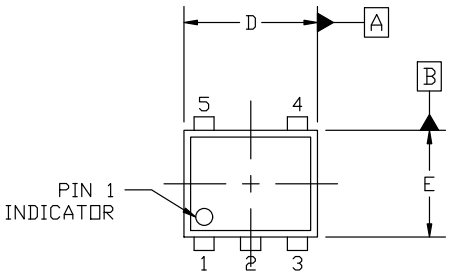

TOP VIEW

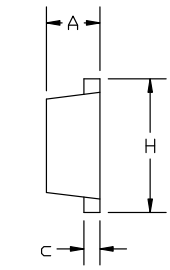

SIDE VIEW

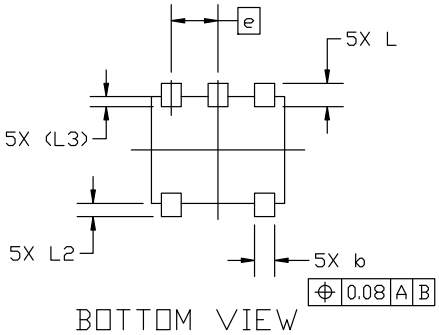

BOTTOM VIEW

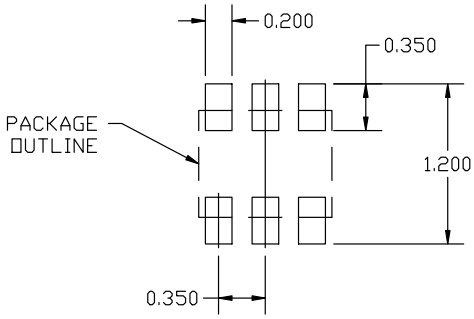

RECOMMENDED MOUNTING FOOTPRINT

*For additional information on our Pb-Free strategy and soldering details, please download the ON Semiconductor Soldering and Mounting Techniques Reference Manual, SOLDERRM/D.

GENERIC MARKING DIAGRAM*

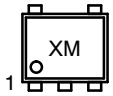

X = Specific Device Code
M = Month Code

*This information is generic. Please refer to device data sheet for actual part marking. Pb−Free indicator, “G” or microdot “▪”, may or may not be present. Some products may not follow the Generic Marking.

DOCUMENT NUMBER:	98AON26457D	Electronic versions are uncontrolled except when accessed directly from the Document Repository. Printed versions are uncontrolled except when stamped “CONTROLLED COPY” in red.
DESCRIPTION:	SOT−953 1.00x0.80x0.37, 0.35P	PAGE 1 OF 1

onsemi and onsemi are trademarks of Semiconductor Components Industries, LLC dba **onsemi** or its subsidiaries in the United States and/or other countries. **onsemi** reserves the right to make changes without further notice to any products herein. **onsemi** makes no warranty, representation or guarantee regarding the suitability of its products for any particular purpose, nor does **onsemi** assume any liability arising out of the application or use of any product or circuit, and specifically disclaims any and all liability, including without limitation special, consequential or incidental damages. **onsemi** does not convey any license under its patent rights nor the rights of others.

onsemi, onsemi, and other names, marks, and brands are registered and/or common law trademarks of Semiconductor Components Industries, LLC dba "**onsemi**" or its affiliates and/or subsidiaries in the United States and/or other countries. **onsemi** owns the rights to a number of patents, trademarks, copyrights, trade secrets, and other intellectual property. A listing of **onsemi**'s product/patent coverage may be accessed at www.onsemi.com/site/pdf/Patent−Marking.pdf. **onsemi** reserves the right to make changes at any time to any products or information herein, without notice. The information herein is provided "as−is" and **onsemi** makes no warranty, representation or guarantee regarding the accuracy of the information, product features, availability, functionality, or suitability of its products for any particular purpose, nor does **onsemi** assume any liability arising out of the application or use of any product or circuit, and specifically disclaims any and all liability, including without limitation special, consequential or incidental damages. Buyer is responsible for its products and applications using **onsemi** products, including compliance with all laws, regulations and safety requirements or standards, regardless of any support or applications information provided by **onsemi**. "Typical" parameters which may be provided in **onsemi** data sheets and/or specifications can and do vary in different applications and actual performance may vary over time. All operating parameters, including "Typicals" must be validated for each customer application by customer's technical experts. **onsemi** does not convey any license under any of its intellectual property rights nor the rights of others. **onsemi** products are not designed, intended, or authorized for use as a critical component in life support systems or any FDA Class 3 medical devices or medical devices with a same or similar classification in a foreign jurisdiction or any devices intended for implantation in the human body. Should Buyer purchase or use **onsemi** products for any such unintended or unauthorized application, Buyer shall indemnify and hold **onsemi** and its officers, employees, subsidiaries, affiliates, and distributors harmless against all claims, costs, damages, and expenses, and reasonable attorney fees arising out of, directly or indirectly, any claim of personal injury or death associated with such unintended or unauthorized use, even if such claim alleges that **onsemi** was negligent regarding the design or manufacture of the part. **onsemi** is an Equal Opportunity/Affirmative Action Employer. This literature is subject to all applicable copyright laws and is not for resale in any manner.

ADDITIONAL INFORMATION

TECHNICAL PUBLICATIONS:
Technical Library: www.onsemi.com/design/resources/technical−documentation
onsemi Website: www.onsemi.com

ONLINE SUPPORT: www.onsemi.com/support
For additional information, please contact your local Sales Representative at
www.onsemi.com/support/sales