N24S64B

EEPROM Serial, 64 Kb, I²C with Software Write Protect and Programmable Device Address

ON Semiconductor®

www.onsemi.com

WLCSP4
C4 SUFFIX
CASE 567VX

Description

The N24S64B is a 64 Kb Serial CMOS EEPROM, internally organized as 8,192 words of 8 bits each.

They feature a 32-byte page write buffer and support both the Standard (100 kHz), Fast (400 kHz) and Fast-Plus (1 MHz) I²C protocol.

The devices also feature a 128-bit factory-set read-only Unique ID, a 32-byte Secure Data Page that can be permanently locked against future changes, and Software Write Protection of the entire array. A Device Configuration Register enables the user to specify the last 3 bits of the Device Address, allowing up to eight N24S64B devices to be addressed on the same bus.

Features

- Supports Standard, Fast and Fast-Plus I²C Protocol
- 1.7 V to 5.5 V Supply Voltage Range
- 32-byte Page Write Buffer
- Lockable Secure Data Page
- User Programmable Write Protection
- User Programmable Device Address
- Schmitt Triggers and Noise Suppression Filters on I²C Bus Inputs (SCL and SDA)
- Low Power CMOS Technology
- 1,000,000 Program/Erase Cycles
- 100 Year Data Retention
- Industrial Temperature Range: −40°C to +85°C
- Ultra-thin 4-ball WLCSP Package
- These Devices are Pb−Free, Halogen Free/BFR Free and are RoHS Compliant*

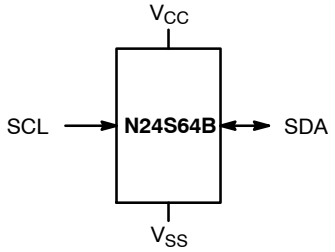

Figure 1. Functional Symbol

PIN CONFIGURATION

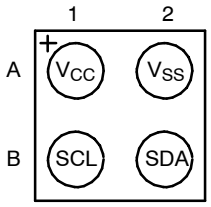

(Top View)

PIN FUNCTION

Pin Name	Function
SDA	Serial Data Input/Output
SCL	Serial Clock Input
V_{CC}	Power Supply
V_{SS}	Ground

MARKING DIAGRAM

X = Specific Device Code (See Ordering Information Table)
Y = Production Year (Last Digit)
W = Production Week Code

ORDERING INFORMATION

See detailed ordering and shipping information on page 9 of this data sheet.

*For additional information on our Pb−Free strategy and soldering details, please download the ON Semiconductor Soldering and Mounting Techniques Reference Manual, SOLDERRM/D.

© Semiconductor Components Industries, LLC, 2017

Table 1. ABSOLUTE MAXIMUM RATINGS

Parameter	Rating	Unit
Storage Temperature	−65 to +150	°C
Voltage on Any Pin with Respect to Ground (Note 1)	−0.5 to +6.5	V

Stresses exceeding those listed in the Maximum Ratings table may damage the device. If any of these limits are exceeded, device functionality should not be assumed, damage may occur and reliability may be affected.

1. The DC input voltage on any pin should not be lower than −0.5 V or higher than V_{CC} + 1.0 V. During transitions, the voltage on any pin may undershoot to no less than −1.5 V or overshoot to no more than V_{CC} + 1.5 V, for periods of less than 20 ns.

Table 2. RELIABILITY CHARACTERISTICS (Note 2)

Symbol	Parameter	Min	Unit
N_{END} (Note 3)	Endurance	1,000,000	Program/Erase Cycles
T_{DR} (Note 4)	Data Retention	100	Years

2. These parameters are tested initially and after a design or process change that affects the parameter according to appropriate AEC−Q100 and JEDEC test methods.
3. Page Mode, V_{CC} = 5 V, 25°C
4. T_A = 55°C

Table 3. DC AND AC OPERATING CONDITIONS

Supply Voltage / Temperature Range	Operation
V_{CC} = 1.7 V to 5.5 V / T_A = −40°C to +85°C	READ / WRITE
V_{CC} = 1.6 V to 5.5 V / T_A = −40°C to +85°C	READ
V_{CC} = 1.6 V to 5.5 V / T_A = 0°C to +85°C	WRITE

Table 4. D.C. OPERATING CHARACTERISTICS

Symbol	Parameter	Test Conditions		Min	Max	Unit
I_{CCR}	Read Current	Read, f_{SCL} = 400 kHz/1 MHz			1	mA
I_{CCW}	Write Current				2	mA
I_{SB}	Standby Current	All I/O Pins at GND or V_{CC}	V_{CC} < 2.5 V		1	μA
			V_{CC} > 2.5 V		2	
I_L	I/O Pin Leakage	Pin at GND or V_{CC}			2	μA
V_{IL1}	Input Low Voltage	$V_{CC} \geq 2.5$ V		−0.5	0.3 V_{CC}	V
V_{IL2}	Input Low Voltage	V_{CC} < 2.5 V		−0.5	0.25 V_{CC}	V
V_{IH1}	Input High Voltage	$V_{CC} \geq 2.5$ V		0.7 V_{CC}	V_{CC} + 1	V
V_{IH2}	Input High Voltage	V_{CC} < 2.5 V		0.75 V_{CC}	V_{CC} + 1	V
V_{OL1}	Output Low Voltage	$V_{CC} \geq 2.5$ V, I_{OL} = 3.0 mA			0.4	V
V_{OL2}	Output Low Voltage	V_{CC} < 2.5 V, I_{OL} = 1.0 mA			0.2	V

Product parametric performance is indicated in the Electrical Characteristics for the listed test conditions, unless otherwise noted. Product performance may not be indicated by the Electrical Characteristics if operated under different conditions.

Table 5. PIN IMPEDANCE CHARACTERISTICS

Symbol	Parameter	Conditions	Max	Unit
C_{IN} (Note 5)	SDA I/O Pin Capacitance	V_{IN} = 0 V	8	pF
C_{IN} (Note 5)	Input Capacitance (other pins)	V_{IN} = 0 V	6	pF

5. These parameters are tested initially and after a design or process change that affects the parameter according to appropriate AEC−Q100 and JEDEC test methods.

Table 6. A.C. CHARACTERISTICS (Note 6)

Symbol	Parameter	Standard V_{CC} = 1.7 to 5.5 T_A = −40 to 85°C		Fast V_{CC} = 1.7 to 5.5 T_A = −40 to 85°C		Fast−Plus V_{CC} = 1.7 to 5.5 T_A = −40 to 85°C		Unit
		Min	Max	Min	Max	Min	Max	
F_{SCL}	Clock Frequency		100		400		1,000	kHz
$t_{HD:STA}$	START Condition Hold Time	4		0.6		0.25		μs
t_{LOW}	Low Period of SCL Clock	4.7		1.3		0.45		μs
t_{HIGH}	High Period of SCL Clock	4		0.6		0.26		μs
$t_{SU:STA}$	START Condition Setup Time	4.7		0.6		0.25		μs
$t_{HD:DAT}$	Data In Hold Time	0		0		0		μs
$t_{SU:DAT}$	Data In Setup Time	250		100		50		ns
t_R (Note 7)	SDA and SCL Rise Time		1,000	20	300		100	ns
t_F (Note 7)	SDA and SCL Fall Time		300	20	300		100	ns
$t_{SU:STO}$	STOP Condition Setup Time	4		0.6		0.25		μs
t_{BUF}	Bus Free Time Between STOP and START	4.7		1.3		0.5		μs
t_{AA}	SCL Low to Data Out Valid		3.5		0.9		0.40	μs
t_{DH}	Data Out Hold Time	100		100		50		ns
T_i (Note 7)	Noise Pulse Filtered at SCL and SDA Inputs		100		50		50	ns
t_{WR}	Write Cycle Time		5		5		5	ms
T_{PU} (Notes 7, 8)	Power-up to Ready Mode		0.35		0.35		0.35	ms

6. Test conditions according to “A.C. Test Conditions” table.
7. Tested initially and after a design or process change that affects this parameter.
8. t_{PU} is the delay between the time V_{CC} is stable and the device is ready to accept commands.

Table 7. A.C. TEST CONDITIONS

Parameter	Condition
Input Levels	$0.2 \times V_{CC}$ to $0.8 \times V_{CC}$
Input Rise and Fall Times	≤ 50 ns
Input Reference Levels	$0.3 \times V_{CC}$, $0.7 \times V_{CC}$
Output Reference Levels	$0.5 \times V_{CC}$
Output Load	Current Source: I_{OL} = 3 mA ($V_{CC} \geq 2.5$ V); I_{OL} = 1 mA ($V_{CC} < 2.5$ V); C_L = 100 pF

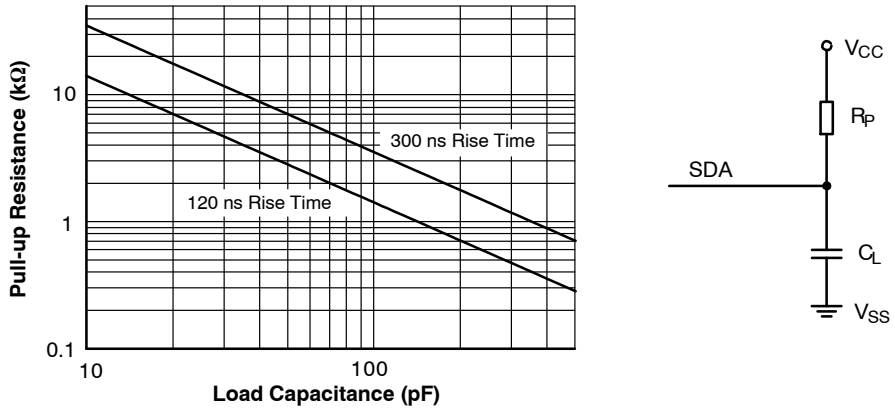

Figure 2. Maximum Pull-up Resistance vs. Load Capacitance

Power-On Reset (POR)

The N24S64B incorporates Power-On Reset (POR) circuitry which protects the device against powering up in the wrong state.

The N24S64B will power up into Standby mode after V_{CC} exceeds the POR trigger level and will power down into Reset mode when V_{CC} drops below the POR trigger level. This bi-directional POR feature protects the device against 'brown-out' failure following a temporary loss of power.

Pin Description

- SCL: The Serial Clock input pin accepts the Serial Clock generated by the Master.
- SDA: The Serial Data I/O pin receives input data and transmits data stored in EEPROM. In transmit mode, this pin is open drain. Data is acquired on the positive edge, and is delivered on the negative edge of SCL.

Functional Description

The N24S64B supports the Inter-Integrated Circuit (I^2C) Bus data transmission protocol, which defines a device that sends data to the bus as a transmitter and a device receiving data as a receiver. Data flow is controlled by a Master device, which generates the serial clock and all START and STOP conditions. The N24S64B acts as a Slave device. Master and Slave alternate as either transmitter or receiver. Up to 8 devices may be connected to the bus as determined by the Device Address bits A_0, A_1, and A_2 in the Device Configuration Register.

I^2C Bus Protocol

The I^2C bus consists of two 'wires', SCL and SDA. The two wires are connected to the V_{CC} supply via pull-up resistors. Master and Slave devices connect to the 2-wire bus via their respective SCL and SDA pins. The transmitting device pulls down the SDA line to 'transmit' a '0' and releases it to 'transmit' a '1'.

Data transfer may be initiated only when the bus is not busy (see A.C. Characteristics).

During data transfer, the SDA line must remain stable while the SCL line is HIGH. An SDA transition while SCL is HIGH will be interpreted as a START or STOP condition (Figure 3). The START condition precedes all commands. It consists of a HIGH to LOW transition on SDA while SCL is HIGH. The START acts as a 'wake-up' call to all receivers. Absent a START, a Slave will not respond to commands. The STOP condition completes all commands. It consists of a LOW to HIGH transition on SDA while SCL is HIGH.

Device Addressing

The Master initiates data transfer by creating a START condition on the bus. The Master then broadcasts an 8-bit serial Slave address. The first 4 bits of the Slave address are set to 1010, for normal Read/Write operations, and to 1011 for special Read/Write operations (Figure 4). The next 3 bits must match the A2, A1, A0 bits in the Device Configuration Register. The last bit, R/W, specifies whether a Read (1) or Write (0) operation is to be performed.

The factory default for the A2, A1, A0 bits is 0.

Acknowledge

After processing the Slave address, the Slave responds with an acknowledge (ACK) by pulling down the SDA line during the 9th clock cycle (Figure 5). The Slave will also acknowledge all address bytes and every data byte presented in Write mode if the addressed location is not write protected. In Read mode the Slave shifts out a data byte, and then releases the SDA line during the 9th clock cycle. As long as the Master acknowledges the data, the Slave will continue transmitting. The Master terminates the session by not acknowledging the last data byte (NoACK) and by issuing a STOP condition. Bus timing is illustrated in Figure 6.

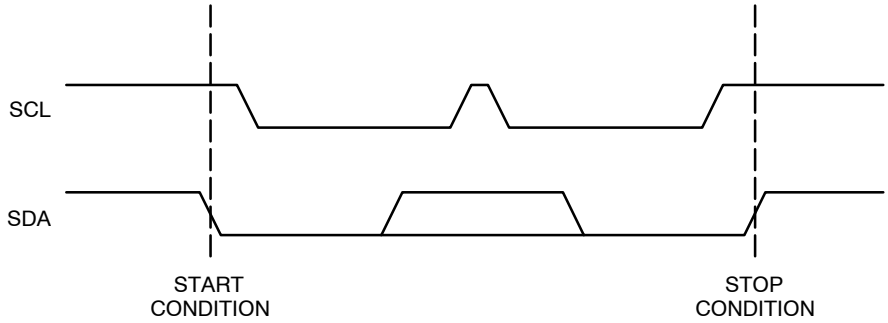

Figure 3. START/STOP Conditions

					DEVICE ADDRESS			
Memory Array Access	1	0	1	0	A2	A1	A0	R/W
Secure Data Page , UID, Device Config.	1	0	1	1	A2	A1	A0	R/W

Figure 4. Slave Address Bits

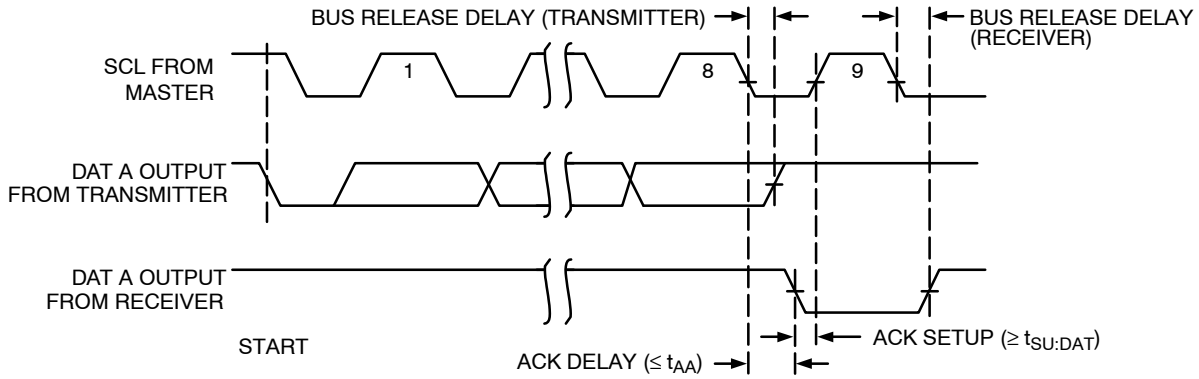

Figure 5. Acknowledge Timing

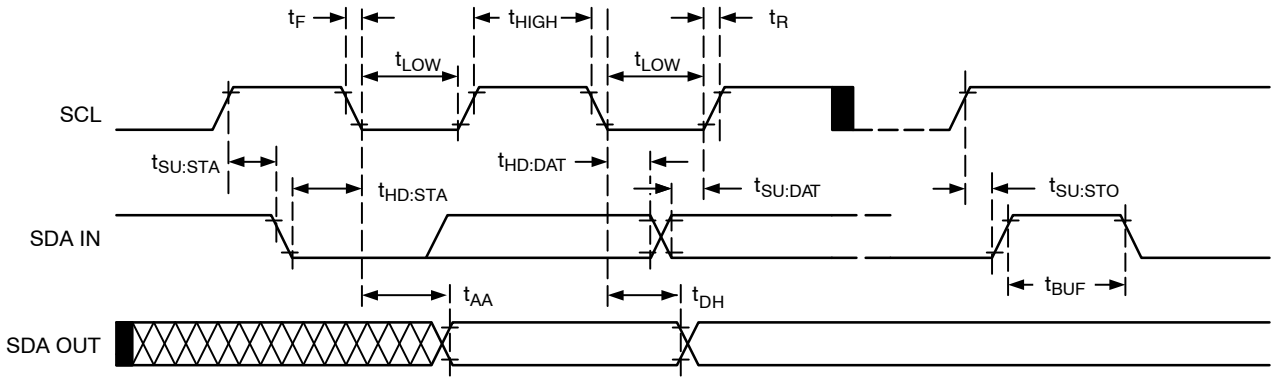

Figure 6. Bus Timing

Write Operations

Byte Write

In Byte Write mode the Master sends a START, followed by Slave address, two byte address (Table 8) and data to be written (Figure 7). The Slave, N24S64B acknowledges all 4 bytes, and the Master then follows up with a STOP, which in turn starts the internal Write operation (Figure 8). During the internal Write cycle (t_{WR}), the N24S64B will not acknowledge any Read or Write request from the Master.

Page Write

The N24S64B contains 8,192 bytes of data, arranged in 256 pages of 32 bytes each. A two byte address word (Table 8), following the Slave address, points to the first byte to be written into the memory array. The most significant 8 bits from the address active bits (a12 to a6) identify the page and the last 6 bits (a5 to a0) identify the byte within the page. Up to 32 bytes can be written in one Write cycle (Figure 9). The internal byte address counter is automatically incremented after each data byte is loaded. If the Master transmits more than 32 data bytes, then earlier bytes will be overwritten by later bytes in a 'wrap-around' fashion (within the selected page). The internal Write cycle starts immediately following the STOP.

Acknowledge Polling

The ready/busy status of the N24S64B can be ascertained by sending Read or Write requests immediately following the STOP condition that initiated the internal Write cycle. As long as internal Write is in progress, the N24S64B will not acknowledge the Slave address.

The Device Configuration Register Write instruction does not support acknowledge polling. Following this instruction, the master must wait t_{WR} = 5 ms before sending a new instruction.

Secure Data Page Write

The Secure Data Page Write instruction is similar to a Page Write instruction. To address the Secure Data Page, the user must address the device with the header 1011 followed by the A2 A1 A0 bits that match the bits in the Device Configuration register. The second byte consists of xxxx x00x, where x is don't care. The third byte indicates the address within the Secure Data Page. Since the page is 64-bytes wide, the first 2 bits of the address are don't care.

The remainder of the instruction is identical to a normal Page Write.

Secure Data Page Lock

The Secure Data Page Lock instruction is similar to a Byte Write instruction. To lock the Secure Data Page against future changes, the user must address the device with the header 1011 followed by the A2 A1 A0 bits that match the bits in the Device Configuration register. The second byte consists of xxxx x10x, where x is don't care. The third byte is don't care.

The data byte following the address bytes must be all 1s (FFh). After this instruction is sent, the user will be able to read, but not to write the content of the Secure Data Page. Any write instructions to the Secure Data Page will return No ACK from the device.

Device Configuration Register Write

The Device Configuration Register Write instruction is similar to a Byte Write instruction. The user must address the device with the header 1011b followed by the A2 A1 A0 bits that match the bits in the Device Configuration register. The second byte consists of xxxx x11x, where x is don't care. The third byte is don't care.

The data byte following the address will be written into the Device Configuration Register (see Table 9 for the position of each bit.) The A2, A1, A0 bits determine the Device Address.

The SWP bit is the Software Write Protection bit. When SWP is set to 1, the memory array, the Secure Data Page and the Device Configuration Register are protected against write operations. The A2, A1, A0 bits cannot be overwritten during a Device Configuration Register write operation if SWP is set to 1. The SWP bit alone can be changed to 0.

The Device Configuration Register Write instruction does not support acknowledge polling.

Table 8. MEMORY ADDRESS BYTES

	A15	A14	A13	A12	A11	A10	A9	A8	A7	A6	A5	A4	A3	A2	A1	A0
Memory Array	x	x	x	a12	a11	a10	a9	a8	a7	a6	a5	a4	a3	a2	a1	a0
Secure Data Page	x	x	x	x	x	0	0	x	x	x	a5	a4	a3	a2	a1	a0
Secure Page Lock Bit	x	x	x	x	x	1	0	x	x	x	x	x	x	x	x	x
Unique ID Number (read−only)	x	x	x	x	x	0	1	x	x	x	x	x	0	0	0	0
Device Configuration	x	x	x	x	x	1	1	x	x	x	x	x	x	x	x	x

Table 9. DEVICE CONFIGURATION REGISTER

b7	b6	b5	b4	b3	b2	b1	b0
A2	A1	A0	x	x	x	SWP	x

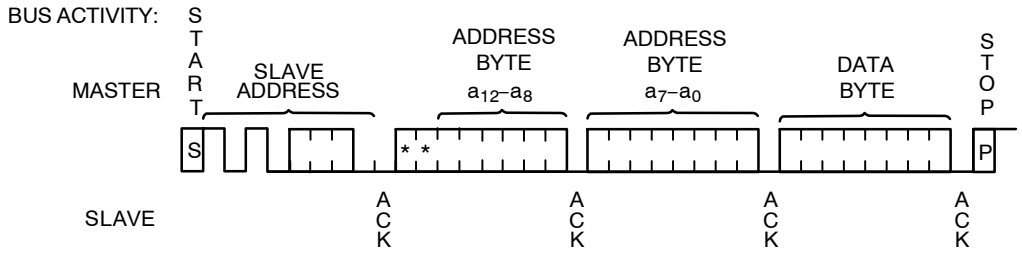

Figure 7. Byte Write Sequence

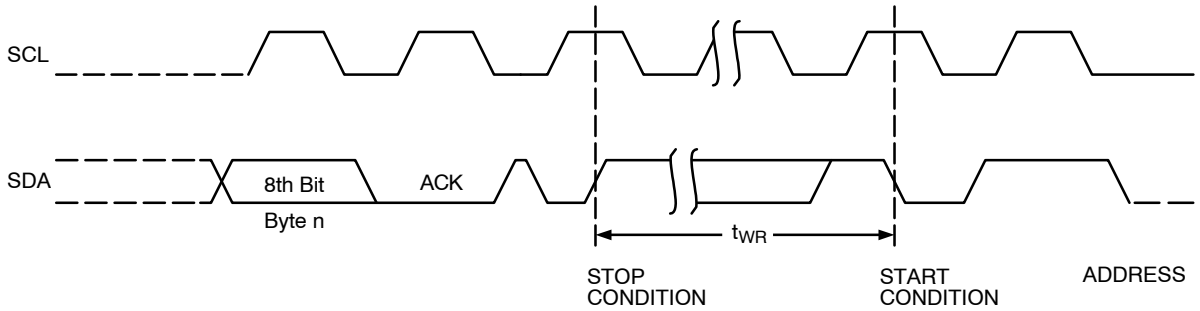

Figure 8. Write Cycle Timing

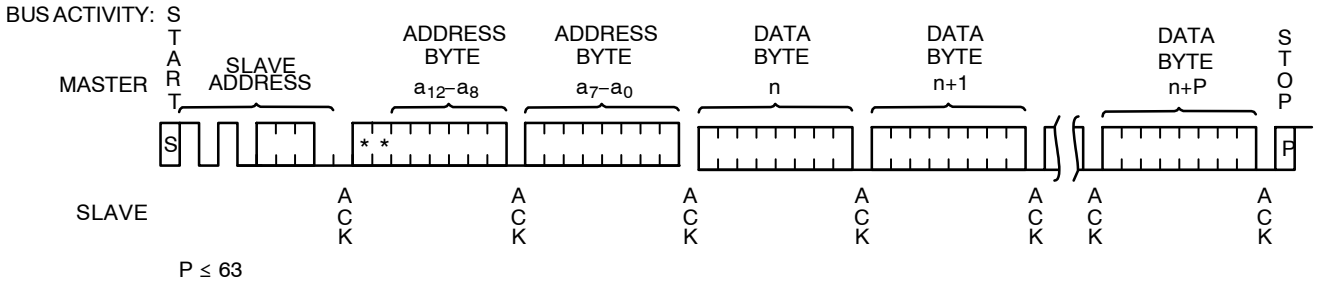

Figure 9. Page Write Sequence

Read Operations

Immediate Read

Upon receiving a Slave address with the R/$\overline{W}$ bit set to '1', the N24S64B will interpret this as a request for data residing at the current byte address in memory. The N24S64B will acknowledge the Slave address, will immediately shift out the data residing at the current address, and will then wait for the Master to respond. If the Master does not acknowledge the data (NoACK) and then follows up with a STOP condition (Figure 10), the N24S64B returns to Standby mode.

Selective Read

To read data residing at a specific location, the internal address counter must first be initialized as described under Byte Write. If rather than following up the two address bytes with data, the Master instead follows up with an Immediate Read sequence, then the N24S64B will use the 14 active address bits to initialize the internal address counter and will shift out data residing at the corresponding location. If the Master does not acknowledge the data (NoACK) and then follows up with a STOP condition (Figure 11), the N24S64B returns to Standby mode.

Sequential Read

If during a Read session the Master acknowledges the 1st data byte, then the N24S64B will continue transmitting data residing at subsequent locations until the Master responds with a NoACK, followed by a STOP (Figure 12). In contrast to Page Write, during Sequential Read the address count will automatically increment to and then wrap-around at end of memory (rather than end of page).

Secure Data Page Read

The Secure Data Page Read instruction is similar to a Sequential Read instruction. To read data from a specific location within the Secure Data Page, the address counter is initialized by sending the device header and two address bytes as for a Secure Data Page Write instruction. This dummy write instruction is followed by an Immediate Read with the device header 1011b, and the device will shift back data from Secure Data Page. When the end of the Secure Data Page is reached, the address counter will wrap-around to zero, and the next byte returned will be the first byte in the page.

Device Configuration Register Read

The Device Configuration Register Read instruction is similar to a Selective Read instruction. The user must send the device header and two address bytes as for a Device Configuration Register Write instruction. This dummy write instruction is followed by an Immediate Read with the device header 1011b, and the device will shift back the content of the Device Configuration Register. Don't care bits are read as 1s.

If the master acknowledges the data byte, requesting more data, the device will continue to return the content of the Device Configuration Register until the Master responds with a NoACK.

Unique ID Number Read

The Unique ID Number Read instruction is similar to a Sequential Read instruction. The user must send the device header starting with 1011b followed by the A2 A1 A0 bits that match the bits in the Device Configuration register. As specified in Table 8, the second byte consists of xxxx x01x and the third byte of xxxx 0000, where x is don't care. This dummy write instruction is followed by an Immediate Read with the device header 1011b, and the device will shift back the Unique ID byte by byte. The Unique ID is 16 bytes (128 bits) long. After the last byte of the Unique ID has been shifted, if the master acknowledges (requesting more data), the device will wrap-around and start returning the Unique ID from the beginning.

Secure Data Page Lock Status Read

There are two ways to check the lock status of the Security Sector. The first way is to initiate a Secure Data Page Write. The EEPROM will acknowledge if the Secure Data Page is unlocked, and it will not acknowledge if the Secure Data Page is locked. After the acknowledge bit, it is recommended to generate a Start condition followed by a Stop condition, to reset the interface.

The second way is to use a Lock Status Read instruction. This instruction is similar to a Selective Read instruction, but requires the use of the device address 1011b followed by the A2, A1, A0 bits. The master first sends a dummy write instruction followed by the address bytes specified in Table 8 (xxxx x10x xxxx xxxx, where x is don't care). This is followed by a read instruction using the same device address as above. The device will return a data byte where Bit 1 indicates the lock status. If the lock is active this bit is "1", otherwise it is "0".

Delivery State

The N24S64B is shipped erased, i.e., all memory array bytes are FFh, and the settable Device Configuration bits set to 0 (1Dh).

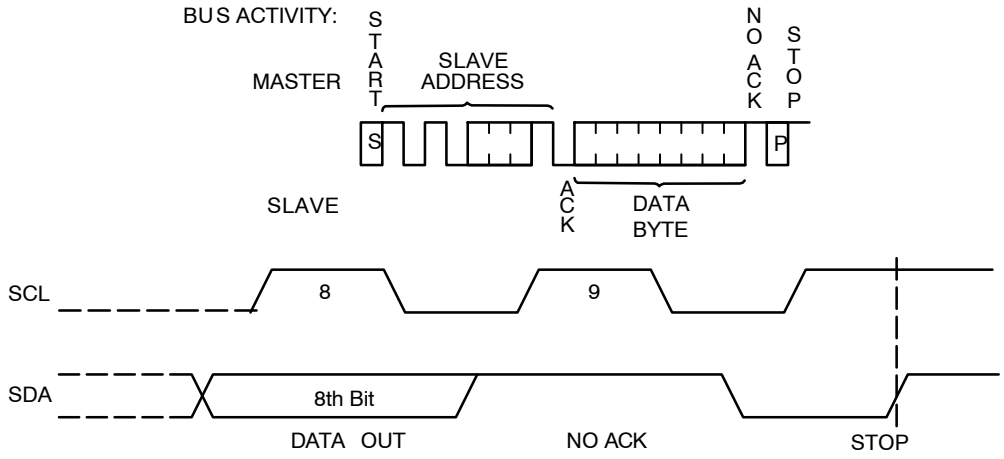

Figure 10. Immediate Read Sequence and Timing

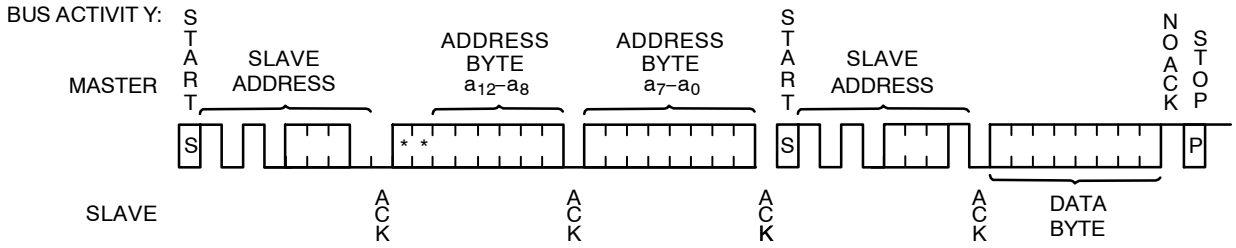

Figure 11. Selective Read Sequence

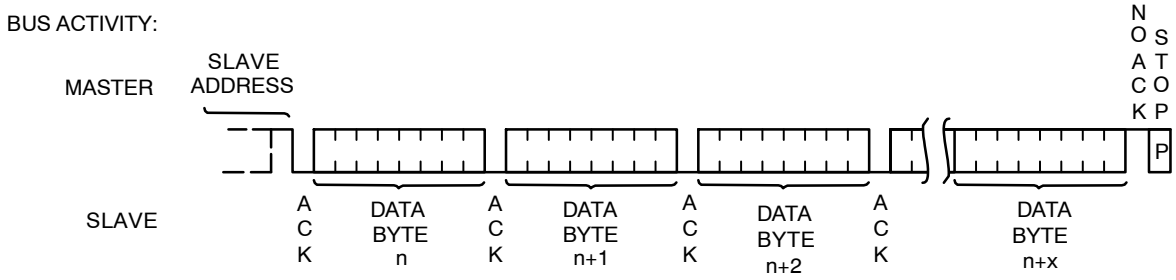

Figure 12. Sequential Read Sequence

Table 10. ORDERING INFORMATION (Notes 9 thru 11)

Device Order Number	Specific Device Marking	Package Type	Temperature Range	Lead Finish	Shipping†
N24S64BC4DYT3G	B	WLCSP 4-ball	Industrial (−40°C to +85°C)	N/A	5,000 / Tape & Reel

†For information on tape and reel specifications, including part orientation and tape sizes, please refer to our Tape and Reel Packaging Specifications Brochure, BRD8011/D.

9. All packages are RoHS-compliant (Lead-free, Halogen-free).
10. For detailed information and a breakdown of device nomenclature and numbering systems, please see the ON Semiconductor Device Nomenclature document, TND310/D, available at www.onsemi.com
11. **Caution:** The EEPROM devices delivered in WLCSP must never be exposed to ultraviolet light. When exposed to ultraviolet light the EEPROM cells lose their stored data.

ON Semiconductor is licensed by Philips Corporation to carry the I^{2}C Bus Protocol.

SCALE 4:1

WLCSP4, 0.77x0.77x0.3
CASE 567VX
ISSUE O

DATE 13 FEB 2018

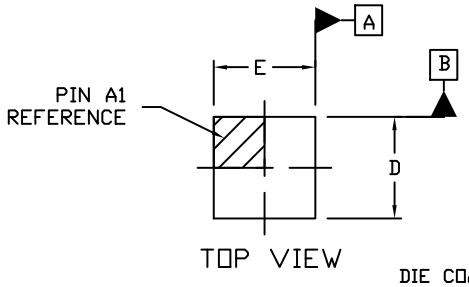

TOP VIEW

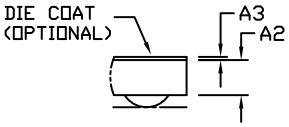

DETAIL A

OPTIONAL CONSTRUCTION

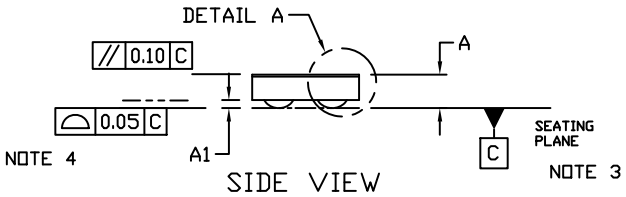

SIDE VIEW

NOTES:

1. DIMENSIONING AND TOLERANCING PER ASME Y14.5M, 1994.
2. CONTROLLING DIMENSION: MILLIMETERS
3. DATUM C, THE SEATING PLANE, IS DEFINED BY THE SPERICAL CROWNS OF THE CONTACT BALLS.
4. COPLANARITY APPLIES TO THE SPHERICAL CROWNS OF THE CONTACT BALLS.
5. DIMENSION b IS MEASURED AT THE MAXIMUM CONTACT BALLS DIAMETER PARALLEL TO TO DATUM C.
6. BACKSIDE COATING IS OPTIONAL.

DIM	MILLIMETERS		
	MIN.	NOM.	MAX.
A	0.25	0.275	0.30
A1	0.04	0.06	0.08
A2	0.19 REF		
A3	0.025 REF		
b	0.20	0.22	0.24
D	0.72	0.77	0.82
E	0.72	0.77	0.82
e	0.40 BSC		

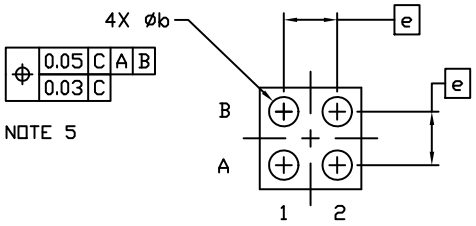

BOTTOM VIEW

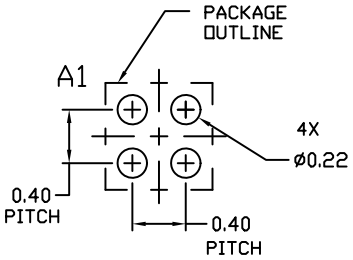

RECOMMENDED
MOUNTING FOOTPRINT

GENERIC
MARKING DIAGRAM*

X = Specific Device Code
Y = Year
W = Work Week

*This information is generic. Please refer to device data sheet for actual part marking. Pb−Free indicator, “G” or microdot “ ▪”, may or may not be present. Some products may not follow the Generic Marking.

DOCUMENT NUMBER:	**98AON83935G**	Electronic versions are uncontrolled except when accessed directly from the Document Repository. Printed versions are uncontrolled except when stamped “CONTROLLED COPY” in red.
DESCRIPTION:	**WLCSP4, 0.77x0.77x0.3**	**PAGE 1 OF 1**

ON Semiconductor and ON are trademarks of Semiconductor Components Industries, LLC dba ON Semiconductor or its subsidiaries in the United States and/or other countries. ON Semiconductor reserves the right to make changes without further notice to any products herein. ON Semiconductor makes no warranty, representation or guarantee regarding the suitability of its products for any particular purpose, nor does ON Semiconductor assume any liability arising out of the application or use of any product or circuit, and specifically disclaims any and all liability, including without limitation special, consequential or incidental damages. ON Semiconductor does not convey any license under its patent rights nor the rights of others.

onsemi, onsemi, and other names, marks, and brands are registered and/or common law trademarks of Semiconductor Components Industries, LLC dba "**onsemi**" or its affiliates and/or subsidiaries in the United States and/or other countries. **onsemi** owns the rights to a number of patents, trademarks, copyrights, trade secrets, and other intellectual property. A listing of **onsemi**'s product/patent coverage may be accessed at www.onsemi.com/site/pdf/Patent−Marking.pdf. **onsemi** reserves the right to make changes at any time to any products or information herein, without notice. The information herein is provided "as−is" and **onsemi** makes no warranty, representation or guarantee regarding the accuracy of the information, product features, availability, functionality, or suitability of its products for any particular purpose, nor does **onsemi** assume any liability arising out of the application or use of any product or circuit, and specifically disclaims any and all liability, including without limitation special, consequential or incidental damages. Buyer is responsible for its products and applications using **onsemi** products, including compliance with all laws, regulations and safety requirements or standards, regardless of any support or applications information provided by **onsemi**. "Typical" parameters which may be provided in **onsemi** data sheets and/or specifications can and do vary in different applications and actual performance may vary over time. All operating parameters, including "Typicals" must be validated for each customer application by customer's technical experts. **onsemi** does not convey any license under any of its intellectual property rights nor the rights of others. **onsemi** products are not designed, intended, or authorized for use as a critical component in life support systems or any FDA Class 3 medical devices or medical devices with a same or similar classification in a foreign jurisdiction or any devices intended for implantation in the human body. Should Buyer purchase or use **onsemi** products for any such unintended or unauthorized application, Buyer shall indemnify and hold **onsemi** and its officers, employees, subsidiaries, affiliates, and distributors harmless against all claims, costs, damages, and expenses, and reasonable attorney fees arising out of, directly or indirectly, any claim of personal injury or death associated with such unintended or unauthorized use, even if such claim alleges that **onsemi** was negligent regarding the design or manufacture of the part. **onsemi** is an Equal Opportunity/Affirmative Action Employer. This literature is subject to all applicable copyright laws and is not for resale in any manner.

ADDITIONAL INFORMATION

TECHNICAL PUBLICATIONS:
Technical Library: www.onsemi.com/design/resources/technical−documentation
onsemi Website: www.onsemi.com

ONLINE SUPPORT: www.onsemi.com/support
For additional information, please contact your local Sales Representative at
www.onsemi.com/support/sales