150 mA, Very Low Dropout Bias Rail CMOS Voltage Regulator

NCP120

The NCP120 is a 150 mA VLDO equipped with NMOS pass transistor and a separate bias supply voltage (V_{BIAS}). The device provides very stable, accurate output voltage with low noise suitable for space constrained, noise sensitive applications. In order to optimize performance for battery operated portable applications, the NCP120 features low I_Q consumption. The XDFN6 1.2 mm x 1.2 mm package is optimized for use in space constrained applications.

Features

- Input Voltage Range: 0.8 V to 5.5 V
- Bias Voltage Range: 2.4 V to 5.5 V
- Fixed Output Voltage Device
- Output Voltage Range: 0.8 V to 2.1 V
- ±1.5% Accuracy over Temperature, 0.5% V_{OUT} @ 25°C
- Ultra−Low Dropout: 75 mV Maximum at 150 mA
- Very Low Bias Input Current of Typ. 80 µA
- Very Low Bias Input Current in Disable Mode: Typ. 0.5 µA
- Logic Level Enable Input for ON/OFF control
- Output Active Discharge Option available
- Stable with a 1 µF Ceramic Capacitor
- Available in XDFN6 – 1.2 mm x 1.2 mm x 0.4 mm package
- These Devices are Pb−Free, Halogen Free/BFR Free and are RoHS Compliant

Typical Applications

- Battery−powered Equipment
- Smartphones, Tablets
- Cameras, DVRs, STB and Camcorders

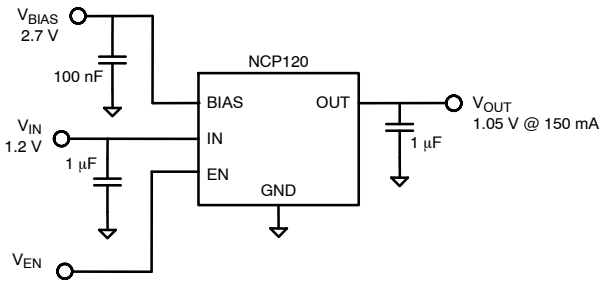

Figure 1. Typical Application Schematics

MARKING DIAGRAM

XDFN6
CASE 711AT

XX = Specific Device Code
M = Date Code

PIN CONNECTIONS

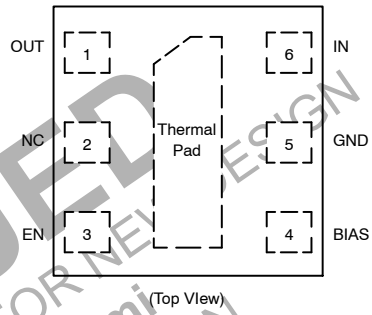

ORDERING INFORMATION

See detailed ordering, marking and shipping information on page 7 of this data sheet.

DISCONTINUED
THIS DEVICE IS NOT RECOMMENDED FOR NEW DESIGN
PLEASE CONTACT YOUR onsemi
REPRESENTATIVE FOR INFORMATION

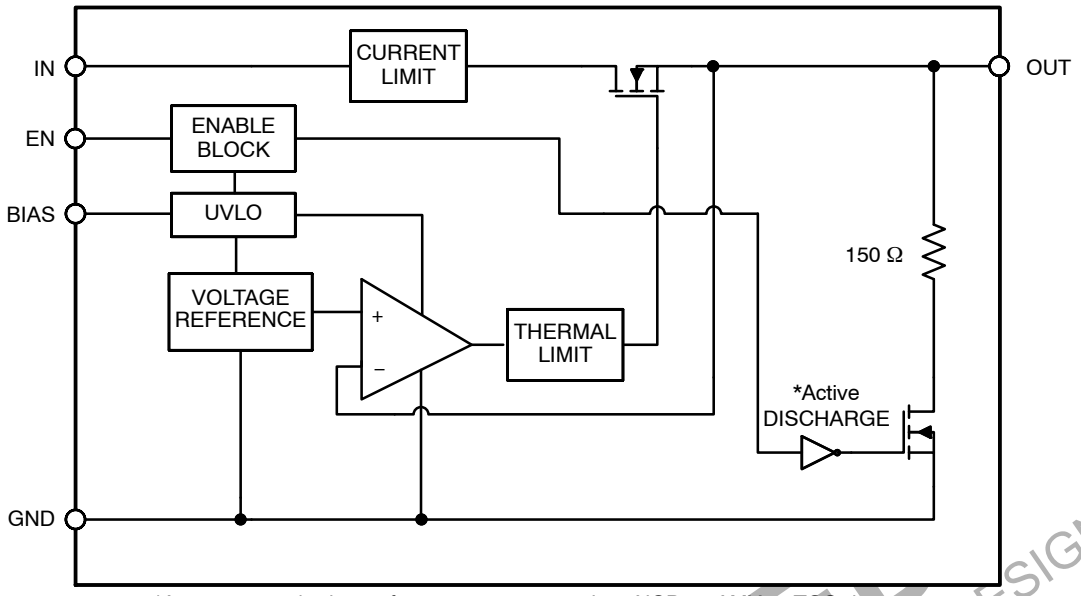

*Active output discharge function is present only in NCP120AMXyyyTCG devices.
yyy denotes the particular output voltage option.

Figure 2. Simplified Schematic Block Diagram

DISCONTINUED
THIS DEVICE IS NOT RECOMMENDED FOR NEW DESIGN
PLEASE CONTACT YOUR onsemi
REPRESENTATIVE FOR INFORMATION

PIN FUNCTION DESCRIPTION

Pin No.	Pin Name	Description
1	OUT	Regulated Output Voltage pin
2	N/C	Not internally connected
3	EN	Enable pin. Driving this pin high enables the regulator. Driving this pin low puts the regulator into shutdown mode.
4	BIAS	Bias voltage supply for internal control circuits. This pin is monitored by internal Under-Voltage Lockout Circuit.
5	GND	Ground pin
6	IN	Input Voltage Supply pin
Pad		Should be soldered to the ground plane for increased thermal performance.

ABSOLUTE MAXIMUM RATINGS

Rating	Symbol	Value	Unit
Input Voltage (Note 1)	V_{IN}	−0.3 to 6	V
Output Voltage	V_{OUT}	−0.3 to (V_{IN}+0.3) ≤ 6	V
Chip Enable and Bias Input	V_{EN}, V_{BIAS}	−0.3 to 6	V
Output Short Circuit Duration	t_{SC}	unlimited	s
Maximum Junction Temperature	T_J	150	°C
Storage Temperature	T_{STG}	−55 to 150	°C
ESD Capability, Human Body Model (Note 2)	ESD_{HBM}	2000	V
ESD Capability, Machine Model (Note 2)	ESD_{MM}	200	V

Stresses exceeding those listed in the Maximum Ratings table may damage the device. If any of these limits are exceeded, device functionality should not be assumed, damage may occur and reliability may be affected.

1. Refer to ELECTRICAL CHARACTERISTIS and APPLICATION INFORMATION for Safe Operating Area.
2. This device series incorporates ESD protection (except OUT pin) and is tested by the following methods:
   ESD Human Body Model tested per EIA/JESD22−A114
   ESD Machine Model tested per EIA/JESD22−A115
   Latchup Current Maximum Rating tested per JEDEC standard: JESD78.

THERMAL CHARACTERISTICS

Rating	Symbol	Value	Unit
Thermal Characteristics, XDFN6 1.2 mm x 1.2 mm Thermal Resistance, Junction−to−Air	$R_{\theta JA}$	170	°C/W

ELECTRICAL CHARACTERISTICS

$-40°C \le T_J \le 85°C$; V_{BIAS} = 2.7 V or (V_{OUT} + 1.6 V), whichever is greater, $V_{IN} = V_{OUT(NOM)}$ + 0.3 V, I_{OUT} = 1 mA, V_{EN} = 1 V, unless otherwise noted. C_{IN} = 1 μF, C_{BIAS} = 0.1 μF, C_{OUT} = 1 μF (effective capacitance) (Note 3). Typical values are at T_J = +25°C. Min/Max values are for $-40°C \le T_J \le 85°C$ unless otherwise noted. (Note 4)

Parameter	Test Conditions	Symbol	Min	Typ	Max	Unit
Operating Input Voltage Range		V_{IN}	$V_{OUT}+V_{DO}$		5.5	V
Operating Bias Voltage Range		V_{BIAS}	(V_{OUT}+1.35) ≥2.4		5.5	V
Undervoltage Lock−out	V_{BIAS} Rising Hysteresis	UVLO		1.6 0.2		V
Output Voltage Accuracy	$-40°C \le T_J \le 85°C$, $V_{OUT(NOM)}$ + 0.3 V ≤ V_{IN} ≤ 5.0 V, 2.7 V or ($V_{OUT(NOM)}$ + 1.6 V), whichever is greater < V_{BIAS} < 5.5 V, 1 mA < I_{OUT} < 150 mA	V_{OUT}	−1.5		+1.5	%
Output Voltage Accuracy		V_{OUT}		±0.5		%
V_{IN} Line Regulation	$V_{OUT(NOM)}$ + 0.3 V ≤ V_{IN} ≤ 5.0 V	$Line_{Reg}$		0.01		%/V
V_{BIAS} Line Regulation	2.7 V or ($V_{OUT(NOM)}$ + 1.6 V), whichever is greater < V_{BIAS} < 5.5 V	$Line_{Reg}$		0.01		%/V
Load Regulation	I_{OUT} = 1 mA to 150 mA	$Load_{Reg}$		1.5		mV
V_{IN} Dropout Voltage	I_{OUT} = 150 mA (Note 5)	V_{DO}		37	75	mV
V_{BIAS} Dropout Voltage	I_{OUT} = 150 mA, $V_{IN} = V_{BIAS}$ (Note 5)	V_{DO}		1.1	1.4	V
Output Current Limit	V_{OUT} = 90% $V_{OUT(NOM)}$	I_{CL}	200	330	600	mA
Bias Pin Operating Current	V_{BIAS} = 2.7 V	I_{BIAS}		80	110	μA
Bias Pin Disable Current	V_{EN} ≤ 0.4 V	$I_{BIAS(DIS)}$		0.5	1	μA
Vinput Pin Disable Current	V_{EN} ≤ 0.4 V	$I_{VIN(DIS)}$		0.5	1	μA
EN Pin Threshold Voltage	EN Input Voltage "H"	$V_{EN(H)}$	0.9			V
	EN Input Voltage "L"	$V_{EN(L)}$			0.4	
EN Pull Down Current	V_{EN} = 5.5 V	I_{EN}		0.3	1.0	μA
Turn−On Time	C_{OUT} = 1 μF, From assertion of V_{EN} to V_{OUT} = 98% $V_{OUT(NOM)}$, $V_{OUT(NOM)}$ = 1.05 V	t_{ON}		150		μs
Power Supply Rejection Ratio	V_{IN} to V_{OUT}, f = 1 kHz, I_{OUT} = 150 mA, $V_{IN} \ge V_{OUT}$ +0.5 V	PSRR(V_{IN})		70		dB
	V_{BIAS} to V_{OUT}, f = 1 kHz, I_{OUT} = 150 mA, $V_{IN} \ge V_{OUT}$ +0.5 V	PSRR(V_{BIAS})		80		dB
Output Noise Voltage	$V_{IN} = V_{OUT}$ +0.5 V, $V_{OUT(NOM)}$ = 1.05 V, f = 10 Hz to 100 kHz	V_N		40		μV_{RMS}
Thermal Shutdown Threshold	Temperature increasing			160		°C
	Temperature decreasing			140		
Output Discharge Pull−Down	V_{EN} ≤ 0.4 V, V_{OUT} = 0.5 V, NCP120A options only	R_{DISCH}		150		Ω

Product parametric performance is indicated in the Electrical Characteristics for the listed test conditions, unless otherwise noted. Product performance may not be indicated by the Electrical Characteristics if operated under different conditions.

3. Effective capacitance, including the effect of DC bias, tolerance and temperature. See the Application Information section for more information.
4. Performance guaranteed over the indicated operating temperature range by design and/or characterization. Production tested at T_A = 25°C. Low duty cycle pulse techniques are used during the testing to maintain the junction temperature as close to ambient as possible.
5. Dropout voltage is characterized when V_{OUT} falls 3% below $V_{OUT(NOM)}$.

DISCONTINUED
THIS DEVICE IS NOT RECOMMENDED FOR NEW DESIGN
PLEASE CONTACT YOUR onsemi REPRESENTATIVE FOR INFORMATION

APPLICATIONS INFORMATION

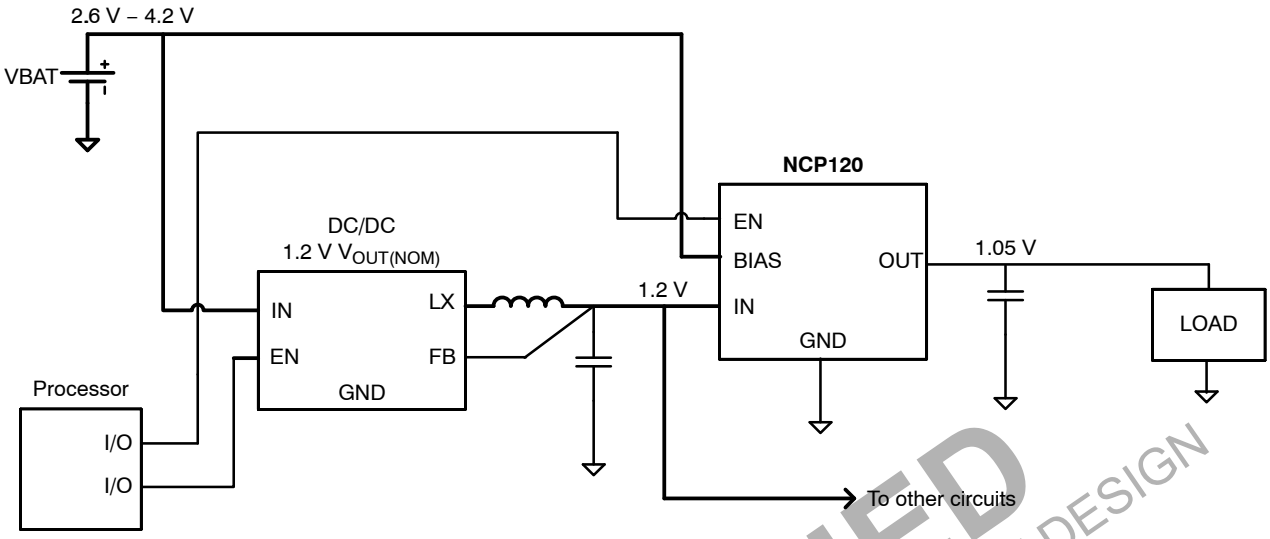

Figure 3. Typical Application: Low−Voltage Post−Regulator with ON/OFF functionality

DISCONTINUED
THIS DEVICE IS NOT RECOMMENDED FOR NEW DESIGN
PLEASE CONTACT YOUR onsemi
REPRESENTATIVE FOR INFORMATION

TYPICAL CHARACTERISTICS

AT T_J = +25°C, V_{IN} = $V_{OUT(TYP)}$ + 0.3 V, V_{BIAS} = 2.7 V, V_{EN} = V_{BIAS}, $V_{OUT(NOM)}$ = 1.05 V, I_{OUT} = 150 MA, C_{IN} = 1 MF, C_{BIAS} = 0.1 MF, AND C_{OUT} = 1 MF (EFFECTIVE CAPACITANCE), UNLESS OTHERWISE NOTED.

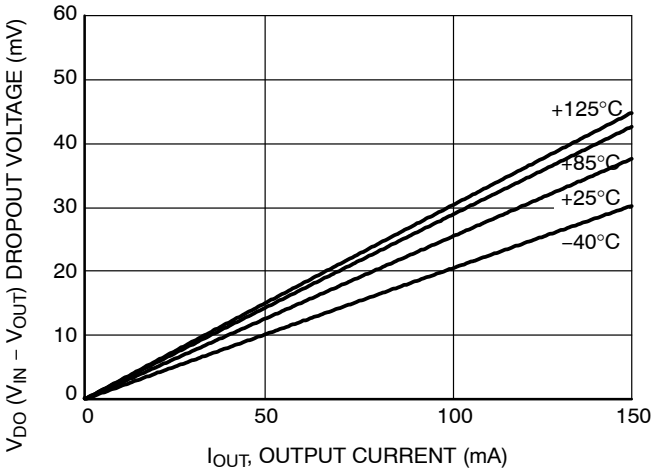

Figure 4. V_{IN} Dropout Voltage vs. I_{OUT} and Temperature T_J

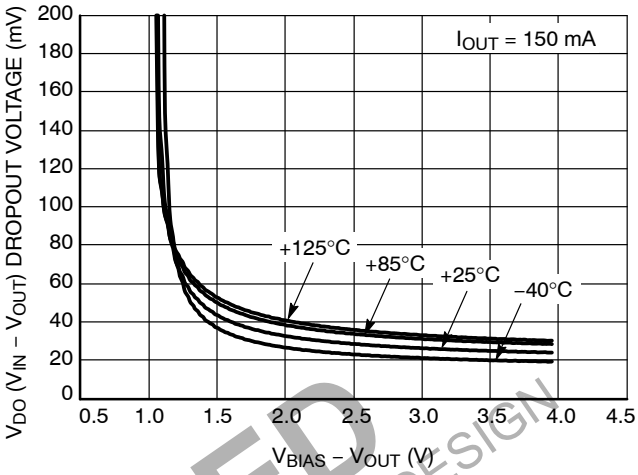

Figure 5. V_{IN} Dropout Voltage vs. (V_{BIAS} − V_{OUT}) and Temperature T_J

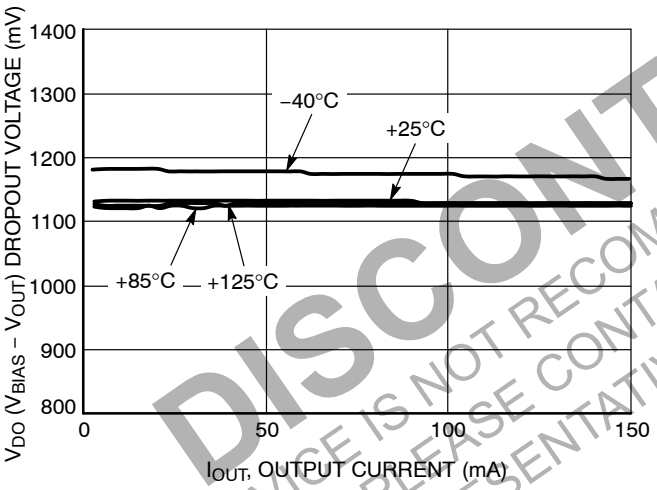

Figure 6. V_{BIAS} Dropout Voltage vs. I_{OUT} and Temperature T_J

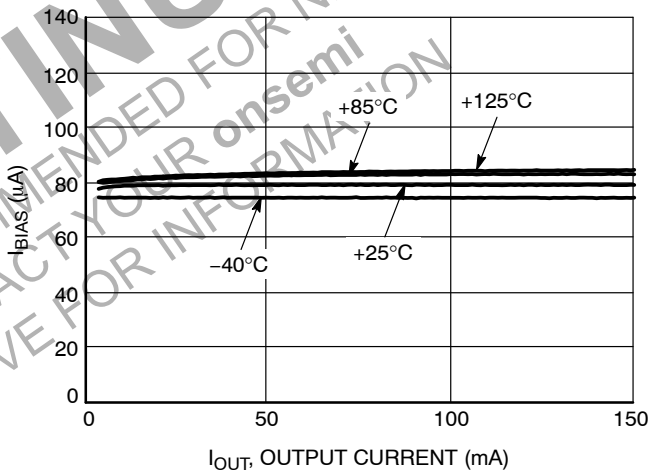

Figure 7. BIAS Pin Current vs. I_{OUT} and Temperature T_J

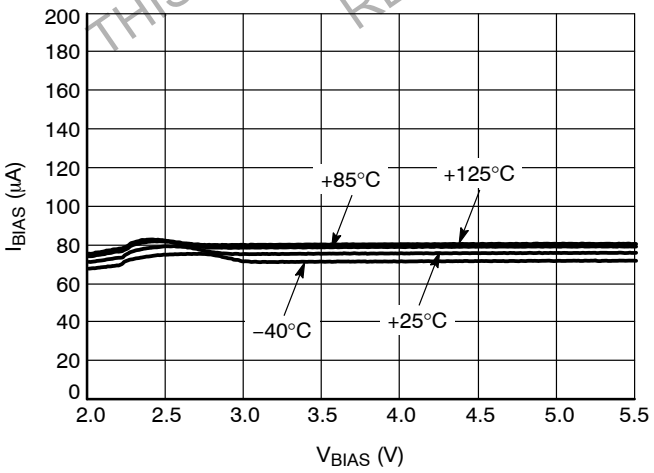

Figure 8. BIAS Pin Current vs. V_{BIAS} and Temperature T_J

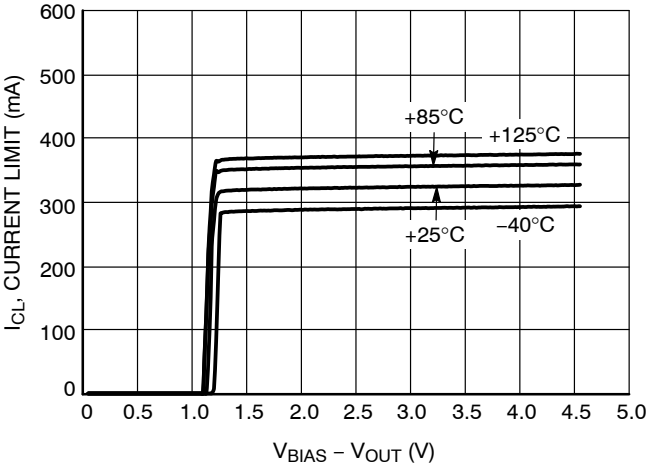

Figure 9. Current Limit vs. (V_{BIAS} − V_{OUT})

DISCONTINUED
THIS DEVICE IS NOT RECOMMENDED FOR NEW DESIGN
PLEASE CONTACT YOUR onsemi
REPRESENTATIVE FOR INFORMATION

APPLICATIONS INFORMATION

The NCP120 dual−rail very low dropout voltage regulator is using NMOS pass transistor for output voltage regulation from V_{IN} voltage. All the low current internal controll circuitry is powered from the V_{BIAS} voltage.

The use of an NMOS pass transistor offers several advantages in applications. Unlike a PMOS topology devices, the output capacitor has reduced impact on loop stability. V_{IN} to V_{OUT} operating voltage difference can be very low compared with standard PMOS regulators in very low V_{IN} applications.

The NCP120 offers smooth monotonic start-up. The controlled voltage rising limits the inrush current.

The Enable (EN) input is equipped with internal hysteresis.

NCP120 is a Fixed Voltage linear regulator.

Dropout Voltage

Because of two power supply inputs V_{IN} and V_{BIAS} and one V_{OUT} regulator output, there are two Dropout voltages specified.

The first, the V_{IN} Dropout voltage is the voltage difference ($V_{IN} - V_{OUT}$) when V_{OUT} starts to decrease by percents specified in the Electrical Characteristics table. V_{BIAS} is high enough, specific value is published in the Electrical Characteristics table.

The second, V_{BIAS} dropout voltage is the voltage difference ($V_{BIAS} - V_{OUT}$) when V_{IN} and V_{BIAS} pins are joined together and V_{OUT} starts to decrease.

Input and Output Capacitors

The device is designed to be stable for ceramic output capacitors with Effective capacitance in the range from 1 μF to 10 μF. The device is also stable with multiple capacitors in parallel, having the total effective capacitance in the specified range.

In applications where no low input supplies impedance available (PCB inductance in V_{IN} and/or V_{BIAS} inputs as example), the recommended C_{IN} = 1 μF and C_{BIAS} = 0.1 μF or greater. Ceramic capacitors are recommended**.** For the best performance all the capacitors should be connected to the NCP120 respective pins directly in the device PCB copper layer, not through vias having not negligible impedance.

When using small ceramic capacitor, their capacitance is not constant but varies with applied DC biasing voltage, temperature and tolerance. The effective capacitance can be much lower than their nominal capacitance value, most importantly in negative temperatures and higher LDO output voltages. That is why the recommended Output capacitor capacitance value is specified as Effective value in the specific application conditions.

Enable Operation

The enable pin will turn the regulator on or off. The threshold limits are covered in the electrical characteristics table in this data sheet. If the enable function is not to be used then the pin should be connected to V_{IN} or V_{BIAS}.

Current Limitation

The internal Current Limitation circuitry allows the device to supply the full nominal current and surges but protects the device against Current Overload or Short.

Thermal Protection

Internal thermal shutdown (TSD) circuitry is provided to protect the integrated circuit in the event that the maximum junction temperature is exceeded. When TSD activated , the regulator output turns off. When cooling down under the low temperature threshold, device output is activated again. This TSD feature is provided to prevent failures from accidental overheating.

DISCONTINUED
THIS DEVICE IS NOT RECOMMENDED FOR NEW DESIGN
PLEASE CONTACT YOUR onsemi
REPRESENTATIVE FOR INFORMATION

ORDERING INFORMATION

Device	Nominal Output Voltage	Marking	Marking Rotation	Option	Package	Shipping†
NCP120AMX080TCG	0.80 V	A	180°	Output Active Discharge	XDFN6 (Pb−Free)	3000 or 5000 / Tape & Reel (Note 6)
NCP120AMX105TCG	1.05 V	D	180°			
NCP120AMX110TCG (Note 6)	1.10 V	E	180°			
NCP120AMX115TCG	1.15 V	F	180°			
NCP120AMX120TCG	1.20 V	J	180°			
NCP120AMX150TCG	1.50 V	K	180°			
NCP120AMX180TCG	1.80 V	L	180°			
NCP120AMX210TCG	2.10 V	P	180°			
NCP120BMX080TCG	0.80 V	A	270°	Non−Active Discharge		
NCP120BMX105TCG	1.05 V	D	270°			
NCP120BMX110TCG	1.10 V	E	270°			
NCP120BMX115TCG	1.15 V	F	270°			
NCP120BMX120TCG	1.20 V	J	270°			
NCP120BMX150TCG	1.50 V	K	270°			
NCP120BMX180TCG	1.80 V	L	270°			
NCP120BMX210TCG	2.10 V	P	270°			

†For information on tape and reel specifications, including part orientation and tape sizes, please refer to our Tape and Reel Packaging Specifications Brochure, BRD8011/D.

To order other package and voltage variants, please contact your **onsemi** sales representative

6. Product processed after October 1, 2022 are shipped with quantity 5000 units / tape & reel.

DISCONTINUED
THIS DEVICE IS NOT RECOMMENDED FOR NEW DESIGN
PLEASE CONTACT YOUR onsemi
REPRESENTATIVE FOR INFORMATION

SCALE 4:1

XDFN6 1.20x1.20, 0.40P
CASE 711AT
ISSUE C

DATE 04 DEC 2015

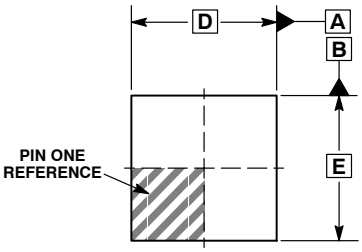

TOP VIEW

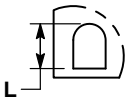

DETAIL A
OPTIONAL
CONSTRUCTION

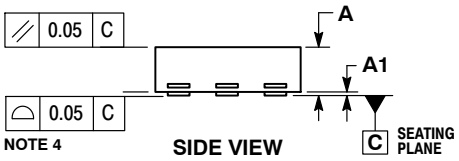

NOTE 4

SIDE VIEW

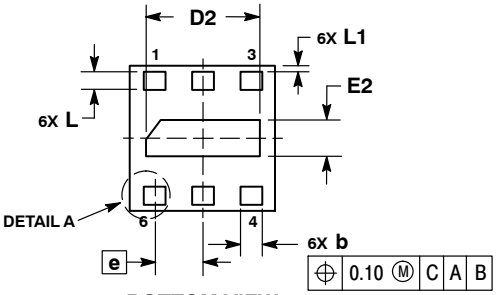

BOTTOM VIEW

NOTE 3

NOTES:
1. DIMENSIONING AND TOLERANCING PER ASME Y14.5M, 1994.
2. CONTROLLING DIMENSION: MILLIMETERS.
3. DIMENSION b APPLIES TO THE PLATED TERMINALS.
4. COPLANARITY APPLIES TO THE PAD AS WELL AS THE TERMINALS.

	MILLIMETERS		
DIM	MIN	TYP	MAX
A	0.30	0.37	0.45
A1	0.00	0.03	0.05
b	0.13	0.18	0.23
D	1.15	1.20	1.25
D2	0.84	0.94	1.04
E	1.15	1.20	1.25
E2	0.20	0.30	0.40
e	0.40 BSC		
L	0.15	0.20	0.25
L1	0.00	0.05	0.10

GENERIC MARKING DIAGRAM*

XX = Specific Device Code
M = Date Code

*This information is generic. Please refer to device data sheet for actual part marking. Pb−Free indicator, “G” or microdot “ ▪”, may or may not be present.

RECOMMENDED MOUNTING FOOTPRINT*

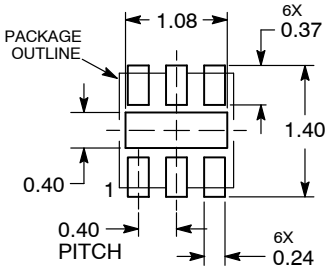

DIMENSIONS: MILLIMETERS

*For additional information on our Pb−Free strategy and soldering details, please download the **onsemi** Soldering and Mounting Techniques Reference Manual, SOLDERRM/D.

DOCUMENT NUMBER:	98AON76141F	Electronic versions are uncontrolled except when accessed directly from the Document Repository. Printed versions are uncontrolled except when stamped “CONTROLLED COPY” in red.
DESCRIPTION:	XDFN6, 1.20 X 1.20, 0.40P	PAGE 1 OF 1

onsemi and onsemi are trademarks of Semiconductor Components Industries, LLC dba **onsemi** or its subsidiaries in the United States and/or other countries. **onsemi** reserves the right to make changes without further notice to any products herein. **onsemi** makes no warranty, representation or guarantee regarding the suitability of its products for any particular purpose, nor does **onsemi** assume any liability arising out of the application or use of any product or circuit, and specifically disclaims any and all liability, including without limitation special, consequential or incidental damages. **onsemi** does not convey any license under its patent rights nor the rights of others.

onsemi, onsemi, and other names, marks, and brands are registered and/or common law trademarks of Semiconductor Components Industries, LLC dba "**onsemi**" or its affiliates and/or subsidiaries in the United States and/or other countries. **onsemi** owns the rights to a number of patents, trademarks, copyrights, trade secrets, and other intellectual property. A listing of **onsemi**'s product/patent coverage may be accessed at www.onsemi.com/site/pdf/Patent−Marking.pdf. **onsemi** reserves the right to make changes at any time to any products or information herein, without notice. The information herein is provided "as−is" and **onsemi** makes no warranty, representation or guarantee regarding the accuracy of the information, product features, availability, functionality, or suitability of its products for any particular purpose, nor does **onsemi** assume any liability arising out of the application or use of any product or circuit, and specifically disclaims any and all liability, including without limitation special, consequential or incidental damages. Buyer is responsible for its products and applications using **onsemi** products, including compliance with all laws, regulations and safety requirements or standards, regardless of any support or applications information provided by **onsemi**. "Typical" parameters which may be provided in **onsemi** data sheets and/or specifications can and do vary in different applications and actual performance may vary over time. All operating parameters, including "Typicals" must be validated for each customer application by customer's technical experts. **onsemi** does not convey any license under any of its intellectual property rights nor the rights of others. **onsemi** products are not designed, intended, or authorized for use as a critical component in life support systems or any FDA Class 3 medical devices or medical devices with a same or similar classification in a foreign jurisdiction or any devices intended for implantation in the human body. Should Buyer purchase or use **onsemi** products for any such unintended or unauthorized application, Buyer shall indemnify and hold **onsemi** and its officers, employees, subsidiaries, affiliates, and distributors harmless against all claims, costs, damages, and expenses, and reasonable attorney fees arising out of, directly or indirectly, any claim of personal injury or death associated with such unintended or unauthorized use, even if such claim alleges that **onsemi** was negligent regarding the design or manufacture of the part. **onsemi** is an Equal Opportunity/Affirmative Action Employer. This literature is subject to all applicable copyright laws and is not for resale in any manner.

ADDITIONAL INFORMATION

TECHNICAL PUBLICATIONS:
Technical Library: www.onsemi.com/design/resources/technical−documentation
onsemi Website: www.onsemi.com

ONLINE SUPPORT: www.onsemi.com/support
For additional information, please contact your local Sales Representative at
www.onsemi.com/support/sales