Safety Controller for Infra-Red LED Illumination to Complement the Image Sensor for Automotive Applications

NCV7694

The NCV7694 is a device which can drive a string of infra−red LEDs using an external mosfet. The IR LEDs are used to illuminate the surroundings of the image sensor. Since these LEDs can damage the end users' eyes, the power feed to the LEDs needs to be turned off during a fault condition.

The NCV7694 driver features prevents the IR LEDs from being on too long due to an inappropriate exposure time or being turned on too frequently using external resistors. The value of the R_{ETL} resistor defines the maximum T_{ON} time of the emitted light intensity and the value of the R_{FRL} resistor defines the maximum frequency of the FLASH signal from the image sensor.

A LED driver with hardware interlocks helps protect the users' eyes in cases where the control signal has failed or a fault in the LED power path has occurred.

LED brightness level is easily programmed using an external resistor in series with the mosfet transistor.

The device can also detect Open Load, Short Circuit to GND and VS. Faults are reported to the DIAG pin, which can directly disable the DC/DC converter to prevent possible damage.

The device is available in 10 pin DFN package.

Features

- Constant Current Output for LED String Drive
- FLASH Input Pin
- Open LED Diagnostic Detection
- Short LED to GND and VS Detection
- Safety Feature Prevent Being ON too long
- Safety Feature Prevent Being ON too frequently
- External Resistor Defining max ON time
- External Resistor Defining min OFF time
- Protection against Short to Ground and Open of the External Resistors
- Detection and Protection Against Under−Voltage and over Temperature
- AEC−Q100 Qualified and PPAP Capable
- ASIL−A safety design, ISO26262 compliant
- 10 Pin Packaging
- Wettable Flank Package for Enhanced Optical Inspection
- These are Pb−Free Devices

Applications

- In−Cabin Monitoring Sensor
- Infrared Illumination for Automotive Cameras
- Machine Vision Systems
- Surveillance Systems

ON Semiconductor®

www.onsemi.com

1

DFNW10, 3x3, 0.5P
CASE 507AG

MARKING DIAGRAM

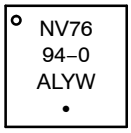

NV7694−0	= Specific Device Code
A	= Assembly Location
L	= Wafer Lot
Y	= Year
W	= Work Week
•	= Pb−Free Package

PIN CONNECTIONS

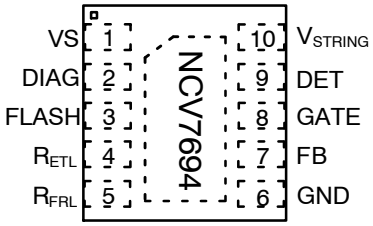

Top View

ORDERING INFORMATION

Device	Package	Shipping†
NCV7694MW0R2G	DFN10 (Pb−Free)	2500 / Tape & Reel

†For information on tape and reel specifications, including part orientation and tape sizes, please refer to our Tape and Reel Packaging Specification Brochure, BRD8011/D.

© Semiconductor Components Industries, LLC, 2020

February, 2021 − Rev. 2

Publication Order Number:
NCV7694/D

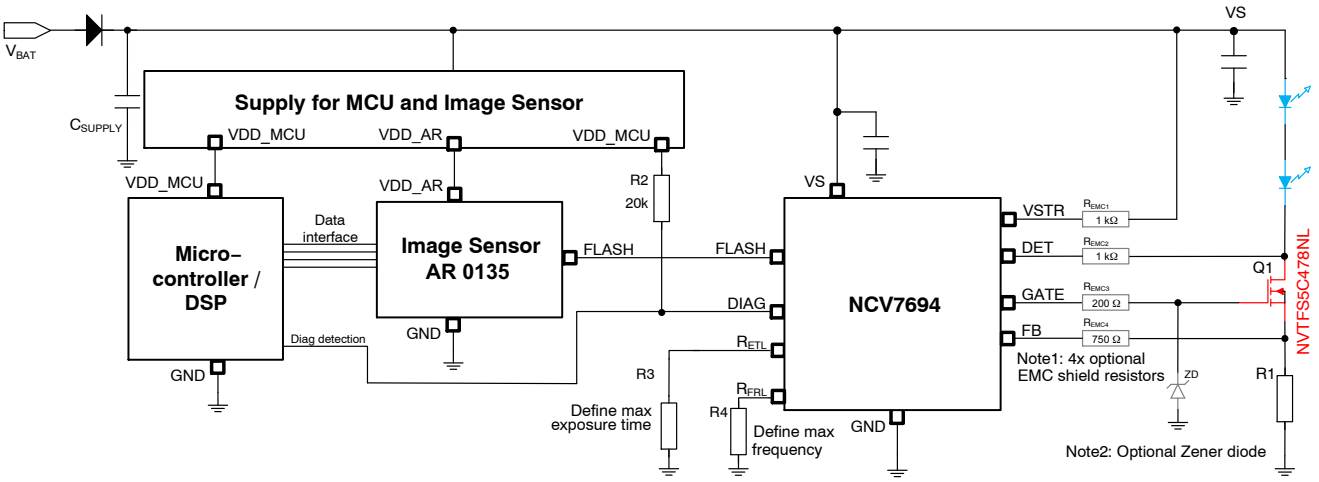

Figure 1. Application Diagram – Powered Directly from Battery

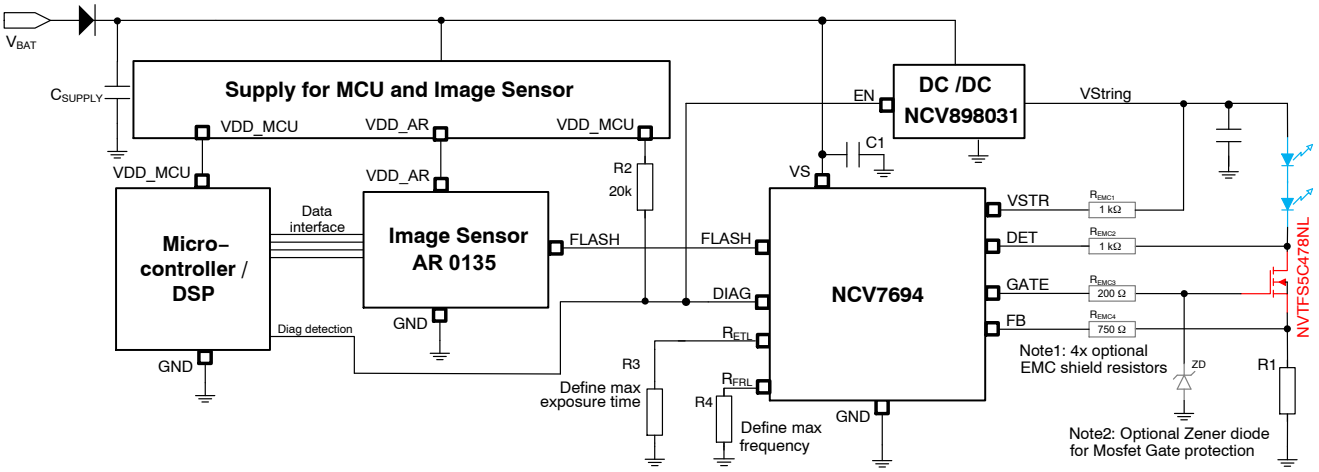

Figure 2. Application Diagram – using DC/DC

RECOMMENDED EXTERNAL COMPONENTS FOR THE APPLICATION DIAGRAM

Component	Function	Min	Typ	Max	Unit
C1	Decoupling capacitor		100		nF
R1	FB current sense resistor		100		mΩ
R2	DIAG pull–up resistor		20		kΩ
R3	Resistor for Exposure Time Limitation	0.8		15	kΩ
R4	Resistor for Frame Rate Limitation	0.8		15	kΩ
REMC1	Optional EMC shield resistor for VSTR pin		1000		Ω
REMC2	Optional EMC shield resistor for DET pin		1000		Ω
REMC3	Optional EMC shield resistor for GATE pin		200		Ω
REMC4	Optional EMC shield resistor for FB pin		750		Ω

(Note 1) Optional EMC serial resistor shall be used in case if the LEDs are detached far away from the NCV7694 device. The resistors improves the EMC susceptibility of the application.

(Note 2) Optional Zener diode may be used if the VS supply is higher than V_{GS} voltage of the external transistor. In case of Open Load on the LEDs, the GATE voltage will go high, the Zener diode will limit the maximum voltage during eventual Open Load condition.

Figure 1 shows an example of the typical output drive configuration. The current through the external LEDs is equal to

$$I_{LEDs} = V_{FB} / R_1$$

Where:

- V_{FB} is internal feedback reference = 300 mV
- R_1 is feedback resistor which set the current

Block Diagram

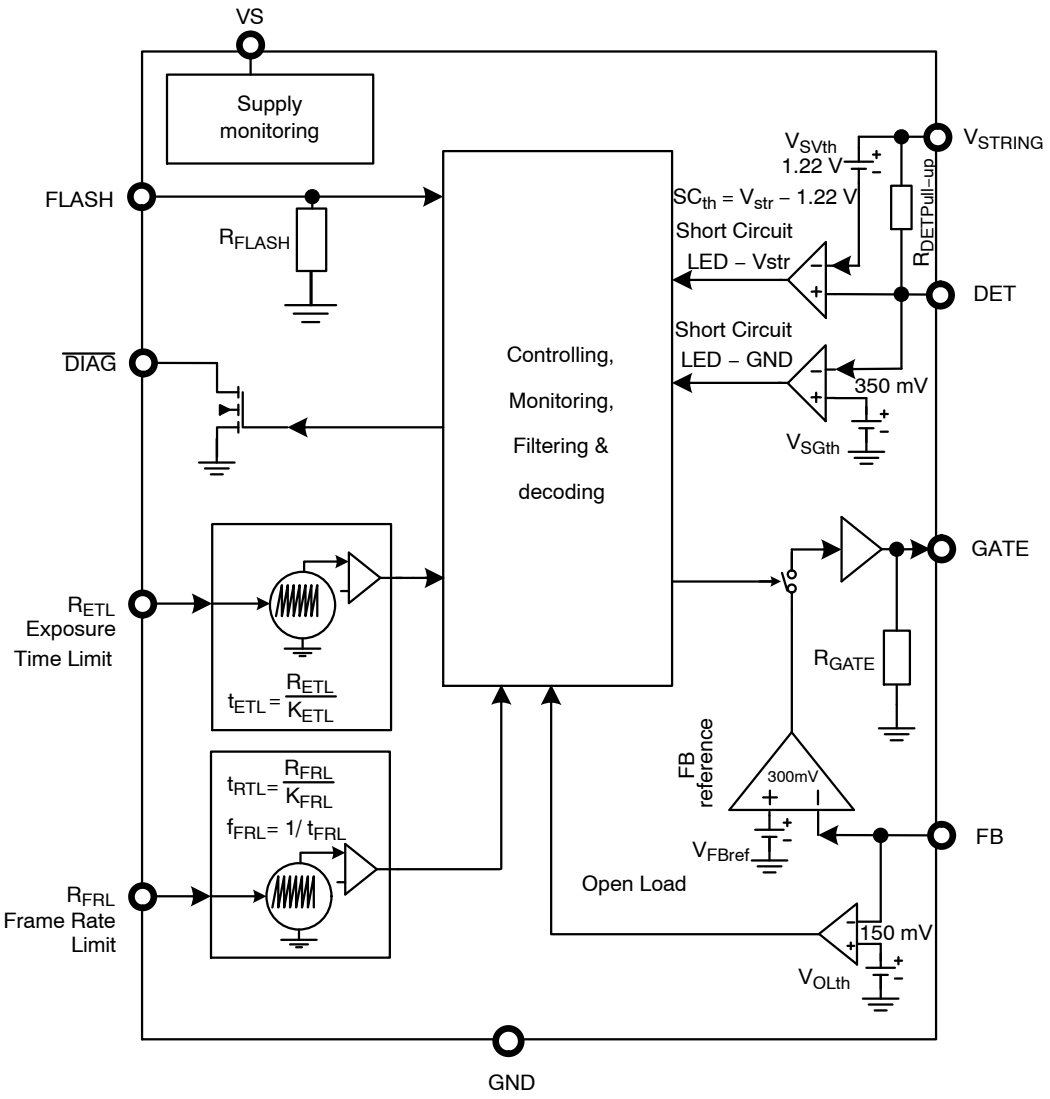

Figure 3. Simplified Block Diagram

Timing Characteristics

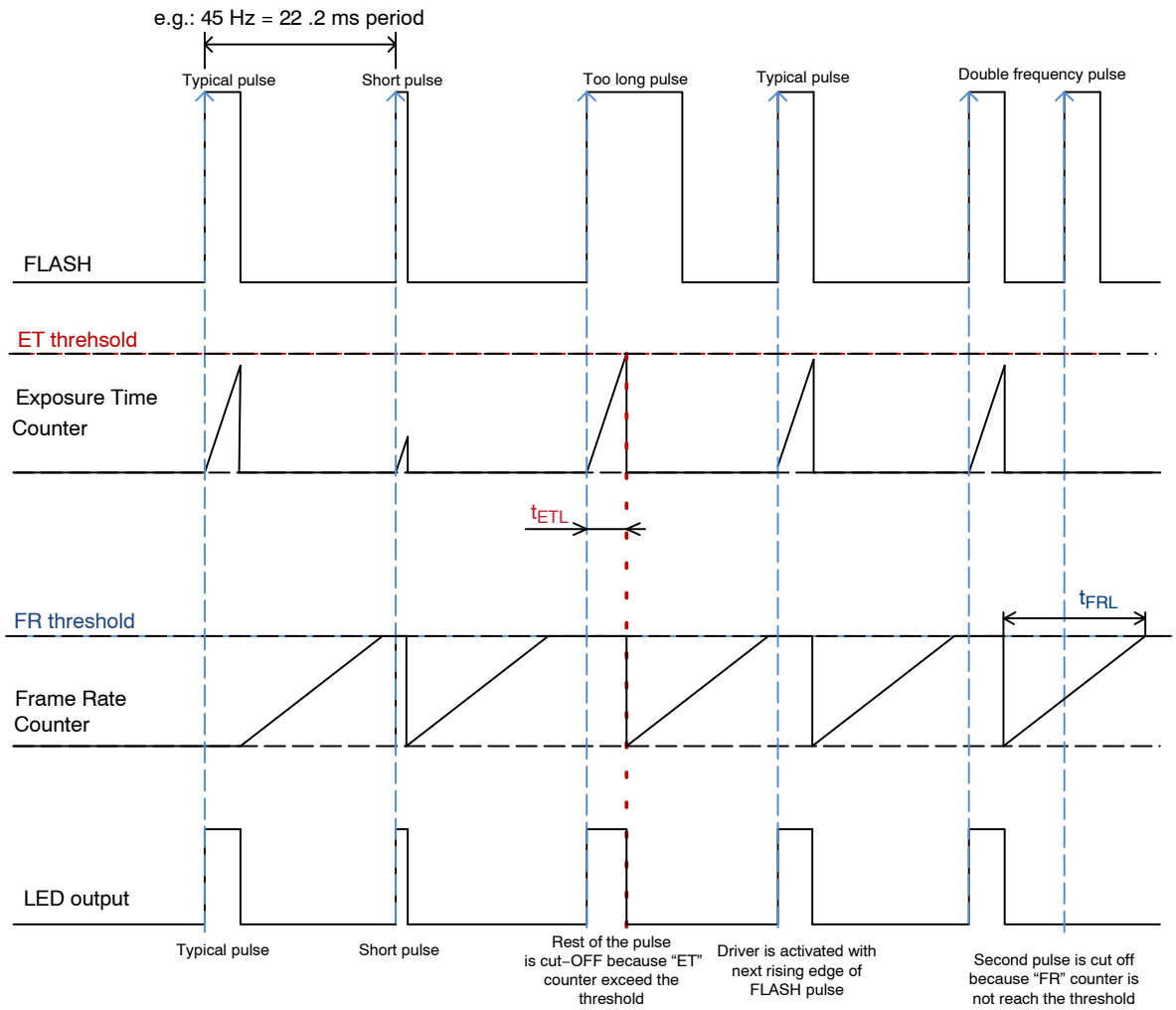

Figure 4. Simplified Internal Timing Characteristic of the Internal ETL, FRL Counter

Safety Feature Behavior

External Resistor Approach

The resistor (RETL, RFRL) creates bias voltage on the pins. Internal oscillator speed is derived from value of the resistors. While FLASH signal is high, internal ETL counter is counting and when the threshold is exceeded, the output is disabled. When FLASH pin is low, the Frame Rate timer is starting to count. The next rising edge of the FLASH signal is propagated to the output only if FRL timer expires. The period of the internals counters can be adjusted by external resistors.

Total tolerance of the maximum T_{ON} or maximum Frame Rate limits will be affected by internal accuracy and accuracy of the external resistor by following equation: Using 1% external resistor approximately 13% tolerance can be achieved.

$$\alpha_{TOTAL} = \sqrt{\alpha^2_{device} + \alpha^2_{resistor}} = \sqrt{13.0^2 + 1^2} = 13.04\ \%$$

PIN FUNCTION DESCRIPTION

10−pin DFN10 Package		
Pin #	**Label**	**Description**
1	VS	Supply voltage of the device
2	DIAG	Diagnostic output
3	FLASH	Logic input for flash exposure time
4	R_{ETL}	External resistor defines maximum Exposure Time Limit
5	R_{FRL}	External resistor defines maximum Frame Rate Limit
6	GND	Ground
7	FB	Feedback reference input 300 mV.
8	GATE	Gate drive for external mosfet
9	DET	LED short detection input
10	V_{STRING}	Short circuit reference voltage

MAXIMUM RATINGS

Symbol	Parameter	Min.	Max.	Unit
Vmax_VS	Continuous supply voltage Transient Voltage (t < 500 ms, “load dump”)	−0.3	+40 +40	V V
Vmax_FLASH	Low Voltage Input pin	−0.3	+3.6	V
Vmax_GATE	Output voltage (during Open Load condition)	−0.3	+VS	V
Vmax_R_{ETL}, R_{FRL}	DC voltage on Resistors	−0.3	+3.6	V
Vmax_FB	Low Voltage Input pin	−0.3	+3.6	V
Vmax_DIAG	Open Drain pin	−0.3	+40	V
Vmax_DET, V_{STRING}	High Voltage Input pin	−0.3	+40	V
Tjmax	Junction Temperature, T_J	−40	+125	°C

Stresses exceeding those listed in the Maximum Ratings table may damage the device. If any of these limits are exceeded, device functionality should not be assumed, damage may occur and reliability may be affected.

1. Maximum ratings are those values beyond which device damage can occur. Maximum ratings applied to the device are individual stress limit values (not normal operating conditions) and are not valid simultaneously. If these limits are exceeded, device functional operation is not implied, damage may occur and reliability may be affected.

ATTRIBUTES

Parameer	Value	Unit
ESD Capability (Note 2) HBM (Human Body Model) CDM (Charge Device Model) MM (Machine Model)	 ≥ ±4.0 ≥ ±1.0 ≥ ±200	 kV kV V
Moisture Sensitivity (DFN10−EP) (Note 3)	1	MSL
Storage Temperature Range	−40 to 150	°C
Package Thermal Resistance (DFN10−EP) (Note 4) − Junction to Ambient, $R_{\theta JA}$ − Junction to Board, $R_{\theta JB}$ − Junction to Case (Top), $R_{\theta JC}$	 62.5 5.5 2.7	 °C/W °C/W °C/W
Ambient Temperature	−40 to 105	°C

2. This device series incorporates ESD protection and is tested by the following methods:
   ESD HBM tested per AEC−Q100−002 (EIA/JESD22−A114)
   ESD CDM tested per EIA/JES D22/C101, Field Induced Charge Model
   ESD MM according to AEC−Q100
3. For additional information, see or download ON Semiconductor’s Soldering and Mounting Techniques Reference Manual, SOLDERRM/D, and Application Note AND8003/D.
4. Values represent thermal resistances under natural convection are obtained in a simulation on a JEDEC−standard, 2S2P; High Effective Thermal Conductivity Test Board as specified in JESD51−7, in an environment described in JESD51−2a.

ELECTRICAL CHARACTERISTICS

(7 V < VS < 28 V, R_{ETL} = 4.99 kΩ, R_{FRL} =1.96 kΩ, 4 V < V_{STRING} < 28 V, Transistor = NVTFS5C478NL, LED = SFH 4725AS, R1 = 100 mΩ, −40°C ≤ T_J ≤ 125°C, unless otherwise specified)

Characteristic	Symbol	Conditions	Min.	Typ.	Max.	Unit
GENERAL						
Supply Voltage	VS_OP	Parametric operation	7	–	28	V
Supply Under−Voltage Lockout	VSUV	VS rising	4.0	4.5	5.0	V
Supply Under−Voltage hysteresis	VSUVhys		150	300	550	mV
Supply Current in normal condition	I_VS	VS = 14 V, FLASH = High, I_{FRL}, I_{ETL} subtracted	–	4.0	6.0	mA
		VS = 14V, FLASH = Low, I_{FRL}, I_{ETL} subtracted	–	3.8	6.0	mA
Supply Current in Fault condition	I_VSerr	VS = 14 V, FLASH = High, Open Load condition, I_{FRL}, I_{ETL} subtracted	–	4.0	6.0	mA
Thermal Shutdown (TSD)			130	150	170	°C
Thermal Hysteresis			–	15	–	°C
FB DRIVER						
FB Regulation reference	V_{FBref}	Under Voltage Lockout < VS	270	300	330	mV
Gate ON voltage	V_{GATE}	FB = 220 mV, DET = 1.0 V	4.5	–	–	V
Propagation Delay FLASH rising – FB ON	t_{ON}	50% criterion	–	8	15	μs
Propagation Delay FLASH falling – FB OFF	t_{OFF}	50% criterion	–	6.6	15	μs
FLASH propagation Delay Delta	t_{pd_delta}	|(Falling time) – (Rising Time)| 50% criterion	–	1.4	4	μs
Output pull−down resistance	R_{GATE}		5	30	100	kΩ
FLASH INPUT PIN						
Input High Threshold	V_{inH}		1.3	1.2	–	V
Input Low Threshold	V_{inL}		–	1.15	1.1	V
Input pull−down resistance	R_{FLASH}		30	120	190	kΩ
PROGRAMMING						
R_{ETL} Bias voltage	V_{ETL}	$I_{ETL} = \frac{V_{ETL}}{R_{ETL}} = \frac{1.0}{4990} = 200.4\ \mu A$	–	1.0	–	V
ETL resistor operation range	R_{ETL}	external resistor value operation range for R_{ETL} = 800 Ω => t_{ETL}= 320 μs; for R_{ETL} = 15 kΩ => t_{ETL} = 6 ms	0.8	–	15	kΩ
Maximum T_{ON} time (typ)	T_{ONmax}	Derived from R_{ETL} and $K_{ETL(typ)}$; valid for R_{ETL} = 15 kΩ	–	–	6.0	ms
ETL multiplication	K_{ETL}	$K_{ETL} = \frac{R_{ETL}}{t_{ETL}}$ $t_{ETL} = \frac{R_{ETL}}{K_{ETL}} = \frac{4.99}{2.5} = 1.996\ ms$	–	2.5	–	kΩ/s
K_{ETL} tolerance	tol_{ETL}	Tolerance of Exposure Time Limit		±13.0		%
Overcurrent protection R_{ETL}	I_{ETL_lim}	Short to ground Resistor detection for R_{ETL} < 750 Ω	1.3	–	–	mA
Open Load protection R_{ETL}	I_{ETL_open}	Open Load detection Resistor detection for R_{ETL} > 17.5 kΩ	–	–	57.5	μA

ELECTRICAL CHARACTERISTICS

(7 V < VS < 28 V, R_{ETL} = 4.99 kΩ, R_{FRL} =1.96 kΩ, 4 V < V_{STRING} < 28 V, Transistor = NVTFS5C478NL, LED = SFH 4725AS, R1 = 100 mΩ, −40°C ≤ T_J ≤ 125°C, unless otherwise specified)

Characteristic	Symbol	Conditions	Min.	Typ.	Max.	Unit
PROGRAMMING						
FRL resistor operation range	R_{FRL}	external resistor value operation range for R_{FRL} = 1 kΩ => f_{FRL} =100 Hz (10 ms) for R_{FRL} = 10 kΩ => f_{FRL}=10Hz (100 ms)	0.8	–	15	kΩ
Maximum FLASH Frequency (typ)	f_{max}	Derived from R_{FRL} and $K_{FRL(typ)}$; valid for R_{FRL} = 800 Ω	–	–	125	Hz
FRL multiplication	K_{FRL}	$K_{FRL} = \frac{R_{FRL}}{t_{FRL}}$ $t_{FRL} = \frac{R_{FRL}}{K_{FRL}} = \frac{1.96}{0.1} = 19.6$ ms $f_{FRL} = \frac{1}{t_{FRL}} = \frac{1}{0.0196} = (51$ Hz)	–	0.1	–	
K_{FRL} tolerance	tol_{FRL}	Tolerance of Frame Rate Limit		±13.0		%
Overcurrent protection R_{FRL}	I_{FRL_lim}	Short to ground Resistor detection for R_{FRL} < 750 Ω	1.3	–	–	mA
Open Load protection R_{FRL}	I_{FRL_open}	Open Load detection Resistor detection for R_{FRL} > 17.5 kΩ	–	–	57.5	μA
OPEN LOAD / SHORT TO GND						
Open Load Detection Threshold (FB pin)	V_{OLth}	FLASH = High	130	150	170	mV
Open Load Blanking Time	$t_{OLBlank}$		10	22	35	μs
Short to GND Detection Threshold (DET pin)	V_{SGth}	FLASH = Low	300	350	400	mV
Short to GND Blanking Time	$t_{SGBlank}$		5	10	15	μs
SHORT CIRCUIT						
Short to V_{STRING} Detection Threshold	V_{SCth}	FLASH = High	V_{STRING} − 1.5	V_{STRING} − 1.22	V_{STRING} − 0.9	V
Short Circuit Blanking Time	$t_{SCBlank}$		5	10	15	μs
Input pull−up resistor on DET pin	$R_{DETPull-up}$	Pull−up to V_{STRING}	30	120	190	kΩ
DIAG OUTPUT						
V_{STRING} diagnostic activation threshold	V_{STRth}	V_{STRING} voltage	2.0	2.2	2.4	V
Output low level	V_{OUTL}	Fault is present, I_{DIAG} = 0.33 mA	–	0.2	0.4	V

PINS DESCRIPTION

FLASH

Flash Input pin is compatible with 1.8 V / 2.8 V logic of the ON Semiconductor image sensors. Internal pull down resistor is implemented to prevent unwanted switch on. Based on the R_{ETL} and R_{FRL} resistors, the maximum T_{ON} FLASH time which can be propagated to the output is 6 ms and minimum T_{OFF} time, which will can be set, is typically 8 ms. The NCV7694 can be used as companion device for 60 Hz camera sensors in full FLASH T_{ON} range or 120 Hz with limited T_{ON} range.

DIAG

Open Drain DIAG pin can be connected with pull up resistor to MCU which will be informed about a fault in case of Open Load, Short to V_{STRING} or Short to Ground of the LEDs. Diagnostic pin can be connected to the Enable pin of the DC/DC converter. The output V_{STRING} voltage will be disconnected and user and devices are protected against damages. The NCV7694 driver can also inform the system while FLASH pulse is too long or is send too frequent. The Open Load and Short circuit detections of the R_{ETL}, R_{FRL} timing resistors are reported on the DIAG pin as well as the Thermal Shutdown Flag and Under Voltage status on the VS supply.

DET

Detection pin is sensing the voltage at the cathode of the LEDs. The voltage on DET pin during the FLASH−ON period should be in range from V_{SGth} (0.35 V) to V_{SVth} (V_{STRING} − 1.22 V). Below 0.35 V the device will detect Short to ground and above V_{STRING} minus 1.22 V the device will detect Short LEDs to V_{STRING}.

In case of DET pin is disconnected, device will go into fault because internal pull−up to V_{STRING} is implemented.

Short to ground can be detected only when output is not activated.

FB

A feedback loop regulates the current through the external LEDs. The voltage across the external sense resistor is regulated to the 300 mV typ. Using FB pin can be detected Open Load condition, if the when FB voltage will be below threshold for longer than blanking time. It is not allowed to put external voltage higher than 0.19 V on the FB pin when the device is not active. The voltage on the FB pin has to be below 0.19 V during VS supply ramp up while FLASH PWM signal is already present.

GATE

The NCV7694 can drive MOSFET transistors with minimum GATE voltage of 4.5 V. The preferred mosfet transistor is NVTFS5C478NL.

R_{ETL} and R_{FRL}

To reduce thermal retina hazard and thermal injury risk of the cornea, the safety turn−off function is implemented. External R_{ETL} and R_{FRL} resistor defines maximum exposure time and maximum frame rate. The maximum times are calculated using resistor values of the R_{ETL} and R_{FRL} resistors divided by K_{FRL} or K_{ETL} coefficients. If the FLASH pulse is permanently HIGH, the output pulse is being activated only after FRL timer expire and during the allowed ETL time period.

Short and Open on the R_{ETL} and R_{FRL}

To be able detect the defect on the external resistors the Open Load and Short to Ground detections are implemented in the NCV7694. If the resistor value will be below 750 Ω, short to ground will be detected. If the resistor value becomes higher than 17.5 kΩ, Open Load is detected.

As soon as a fault condition is detected, then after a short filter time the driver is switched off and fault on the DIAG pin is reported

V_{STRING}

High voltage input pin sense the voltage on the top of the LEDs and enable the Open Load and Short diagnostic as soon as the voltage exceed the threshold VSTRth >2.2 V. If DC/DC converter is not used, the VSTRING voltage has to be connected to the VS pin. If the LED diagnostic is not required, then the VSTRING pin has to be grounded.

DETAILED OPERATING DESCRIPTION

Under Voltage Lockout

Under voltage Lockout feature is used to protect against an abnormal status during startup. When the initial soft start voltage is greater than 4.5 V (typ) the device starts to be active. Below this threshold the GATE output pin is pulled low to ground to prevent opening external N−MOS transistor and DIAG pin is pulled low to report.

Thermal Shutdown

The thermal shutdown circuit checks the internal junction temperature of the device. When the internal temperature rises above the Thermal shutdown threshold, then after a short filter time the driver is switched off and fault on the DIAG pin is reported.

Exceeding the Flash Pulse

If the duration of the FLASH pulse exceeds the pre−defined timing or the FLASH pulse repetition is too frequent, the GATE of the transistor is switched off. The limitation of the FLASH pulses is also reported on the DIAG pin. The first FLASH pulse after power−on−reset should be delayed longer than FRL period, otherwise the FLASH pulse will be limited and DIAG pin will report a fault until FRL counter expires.

Open Load Detection

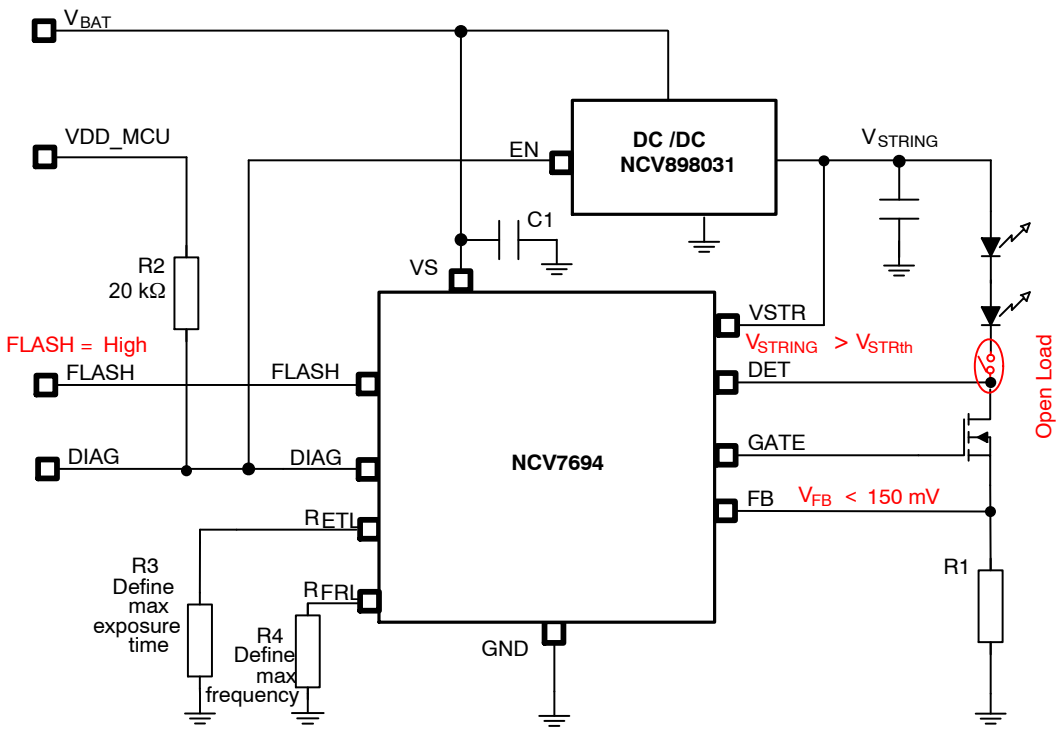

Figure 5. Open Load Detection Circuit

When Open Load fault is introduced during FLASH = High and $V_{STRING} > V_{STRth}$, the 22 µs blanking time eliminate the false faults. When blanking time expires, the NCV7694 immediately report a fault on the DIAG pin. The output GATE pin remains active. The DIAG pin is recovered with the falling edge on the FLASH pin or after ETL counter is expired.

If EN pin of the DC/DC converter is connected to the DIAG output, the Open Load causes switching OFF the V_{STRING} voltage. The DIAG pin is recovered as soon as FLASH pin goes low or ELT counter expired. It will take approximately 2 ms to re−activate the DC/DC V_{STRING} voltage of the converter. With typical FRL setting, the driver will be ready to perform the diagnostic on the next FLASH pulse.

If the ENable of the DC/DC converter is not driven by NCV7694, the Open Load is reported to the DIAG pin.

Diagnostic is not active when $V_{STRING} < V_{STRth}$. The first FLASH pulse will not be detected when driver is going to be recovered from a Short to GND fault because the DC/DC converter in not fully active.

OPEN LOAD BEHAVIOR

Conditions: VS powered, DC /DC used, EN connected to the DIAG pin

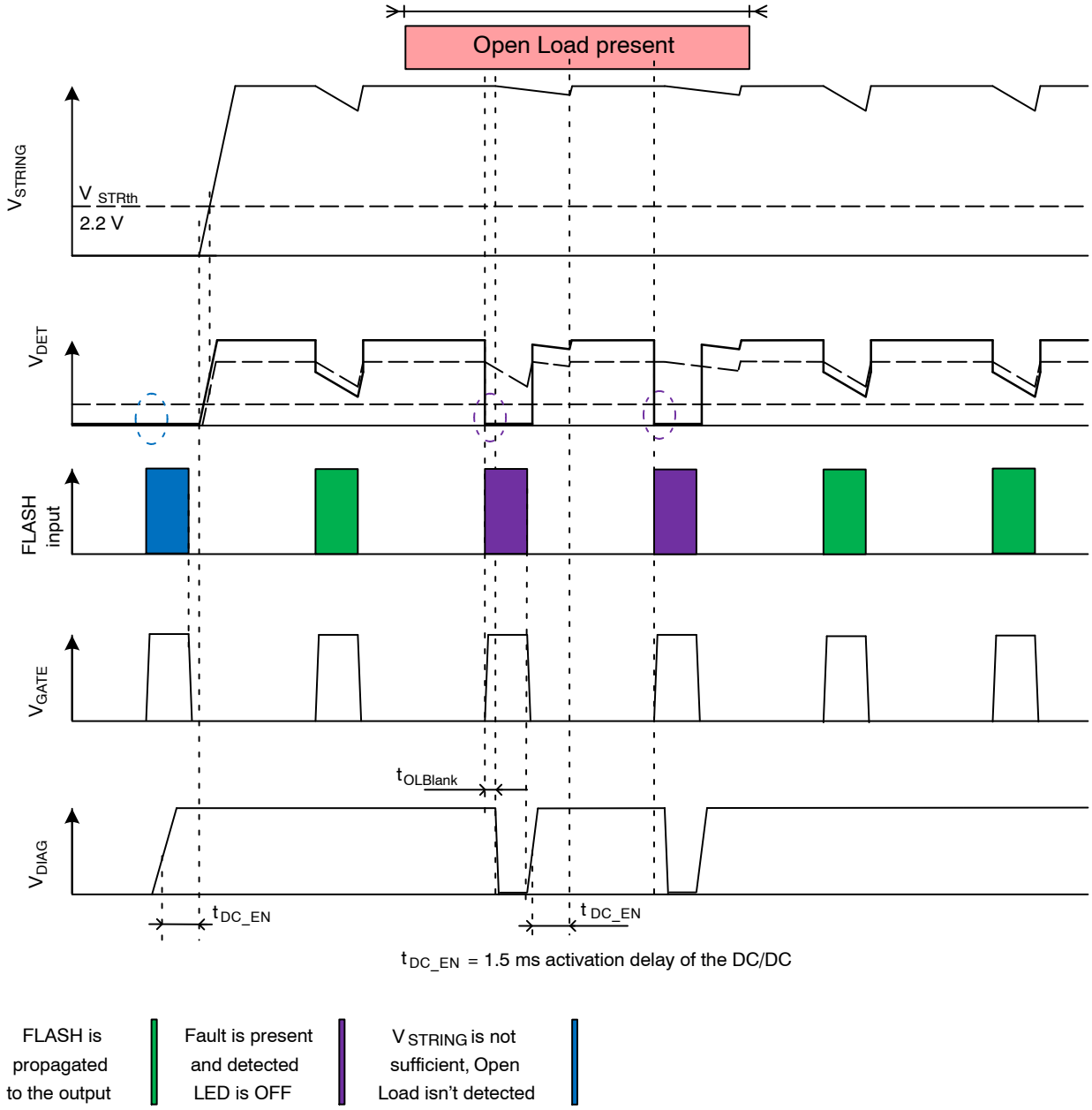

Figure 6. Timing of the Open Load Behavior

Short to Ground

In case of short to ground, huge amount of current is passing through the LEDs. To protect the LEDs and Human eyes, the safety mechanism can be implemented. The DIAG output diagnostic pin can be connected directly to the Enable of the DC/DC converter. In case of fault, the DC/DC converter is automatically disabled after blanking times.

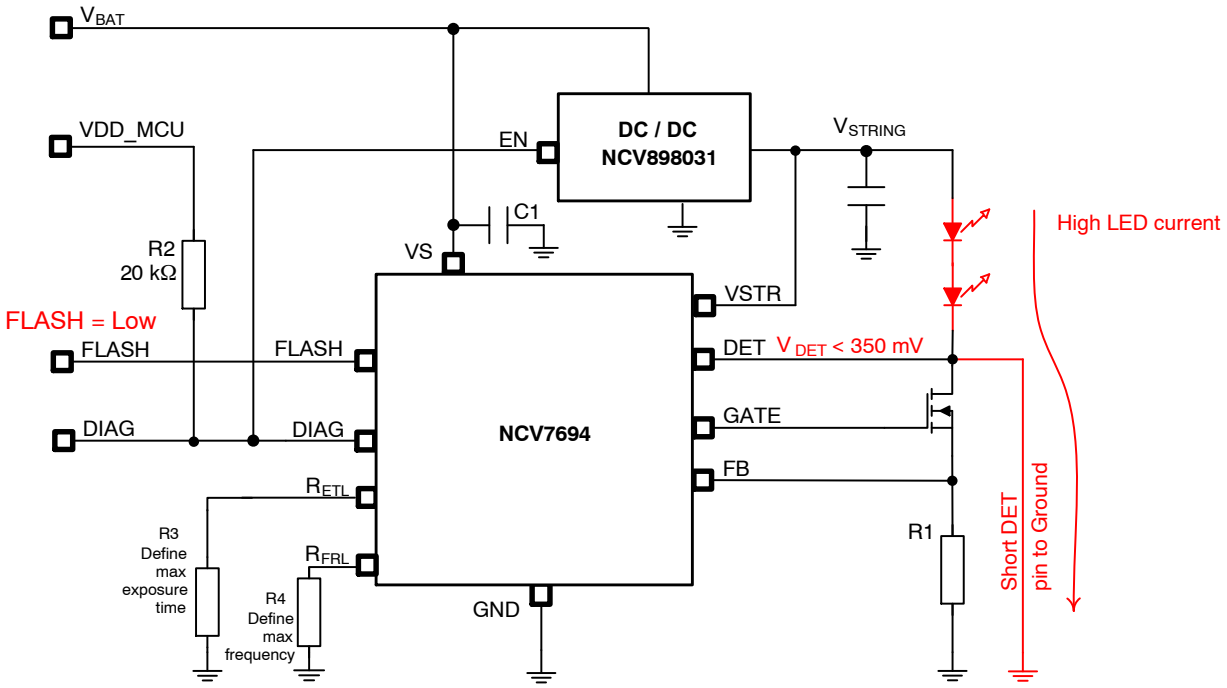

Figure 7. Short to Ground Detection Circuit

When Short to Ground is introduced during $V_{STRING} > V_{STRth}$ and FLASH is low, the 10 µs blanking time eliminate the false faults. When blanking time expires, the NCV7694 immediately report a fault on the DIAG pin which leads to the switching OFF the V_{STRING} voltage to protect the LEDs. The output GATE pin remains active. The device is recovered with next rising edge on the FLASH input pin. (The next FLASH pulse will not be propagated to the output, because the DC/DC converter is not activated).

The microprocessor can distinguish between Short to GND and Open Load during FLASH = Low. If the DIAG pin remains low during FLASH = Low, the Short to Ground was detected and it is not recommended to not turn ON the V_{STRING} voltage.

BEHAVIOR OF THE SHORT TO GND

Conditions: VS powered, DC /DC used, EN connected to the DIAG pin

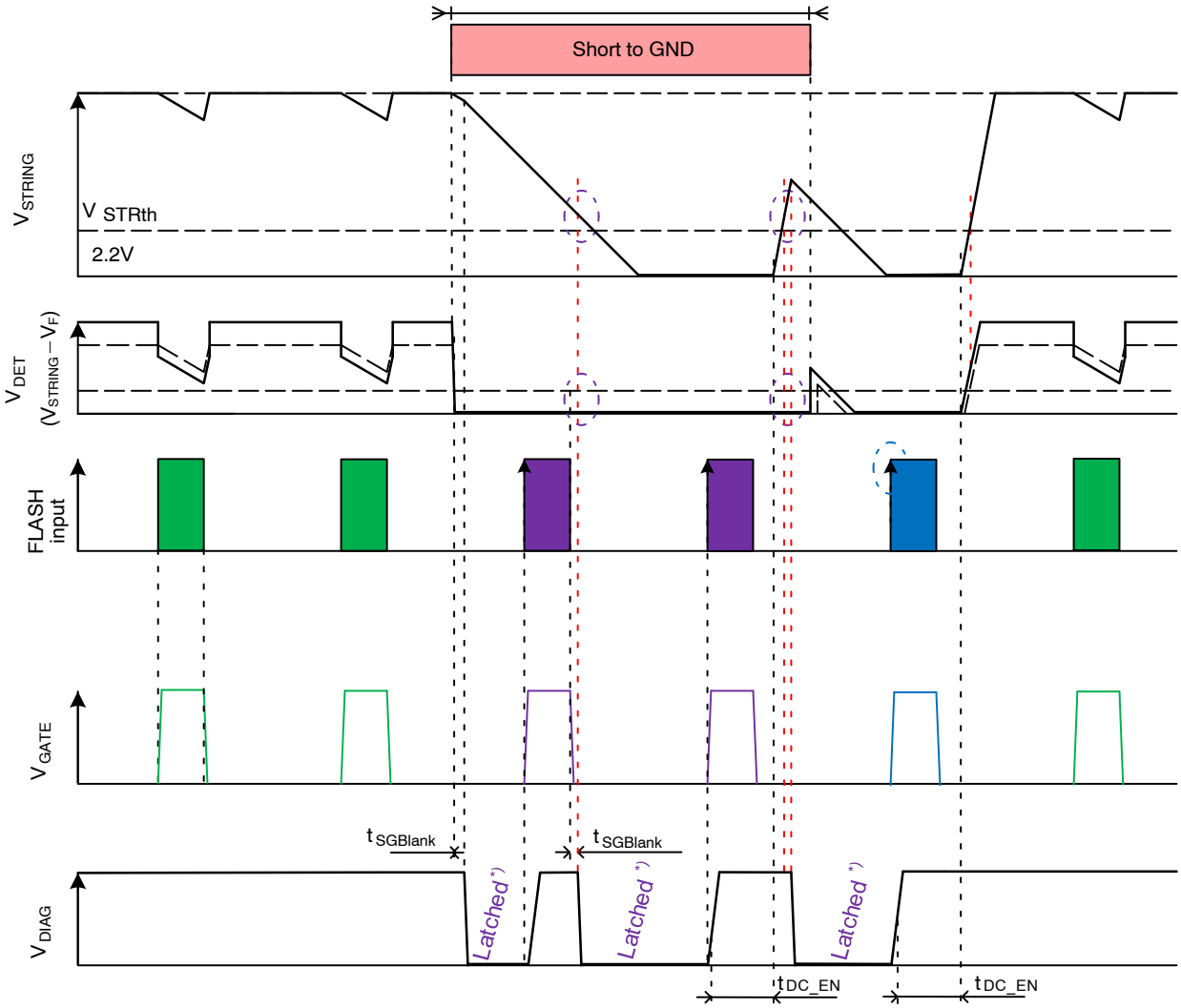

t_{DC_EN} = 1.5 ms activation delay of the DC/DC

FLASH is propagated to the output | Fault is present and detected LEDs are OFF | V_{STRING} is not sufficient, Open Load isn't detected

*) DIAG latched until next FLASH rising edge

Figure 8. Timing of the Short to GND Behavior

Short to VS

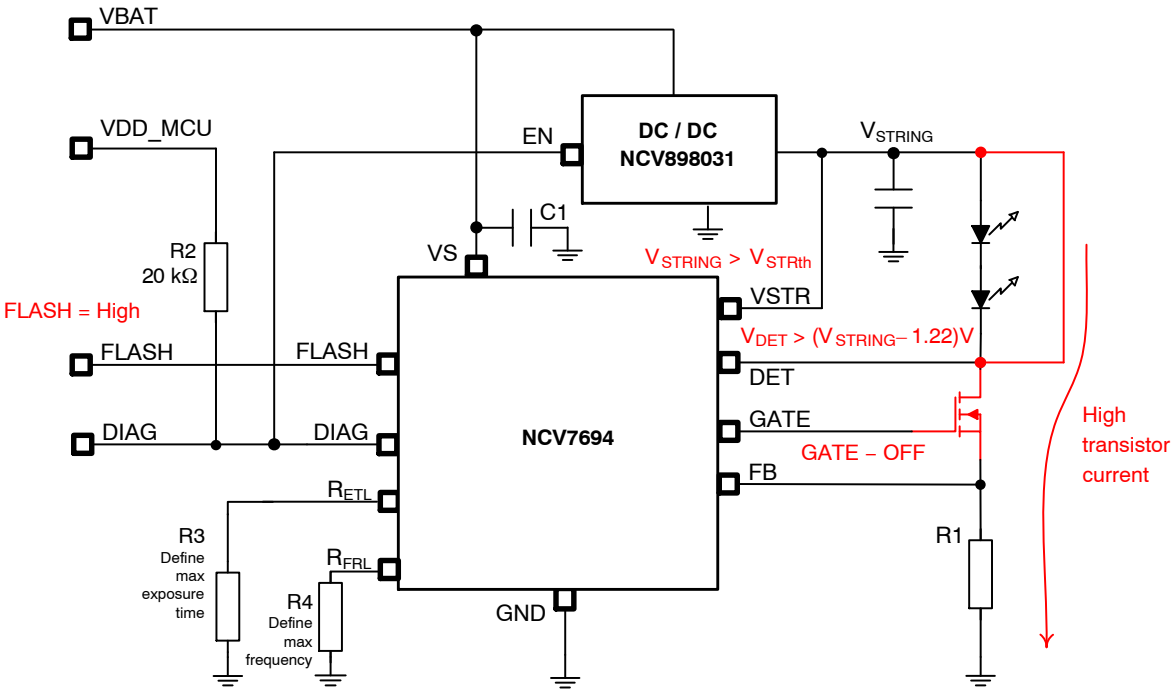

Figure 9. Short to VSTRING Detection Circuit

When Short Cathode of the LEDs to V_{STRING} voltage is introduced during the FLASH = High and $V_{STRING} > V_{STRth}$, the 10 µs blanking time eliminate the false faults. When the blanking time expires, the NCV7694 immediately switch OFF the GATE output to protect the external transistor against high power dissipation. The DIAG pin will report a fault which will lead to switching OFF the DC/DC V_{STRING} voltage if the DIAG pin is connected to the Enable of the DC/DC converter. The fault is latched during the FLASH signal is high or until ETL counter expires. The device will be recovered only with next falling edge on the FLASH or when the ETL counter is expired.

The diagnostic is not active when $V_{STRING} < V_{STRth}$ or also during FLASH = Low.

Behavior of the Short to V_{STRING}:

Conditions: VS powered, DC /DC used, EN connected to the DIAG pin

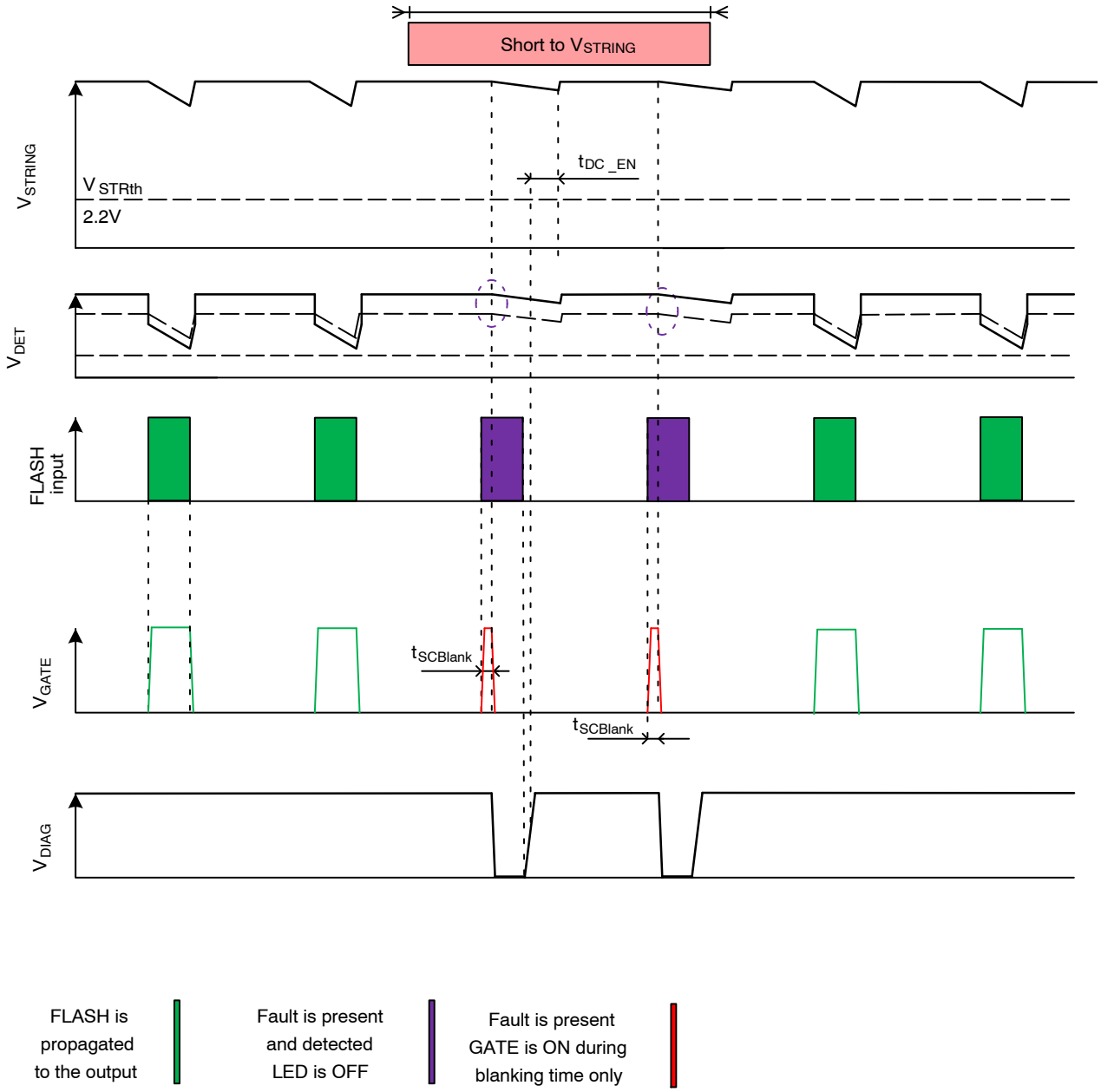

Figure 10. Timing of the Short to VSTRING Behavior

Overview of the Faults

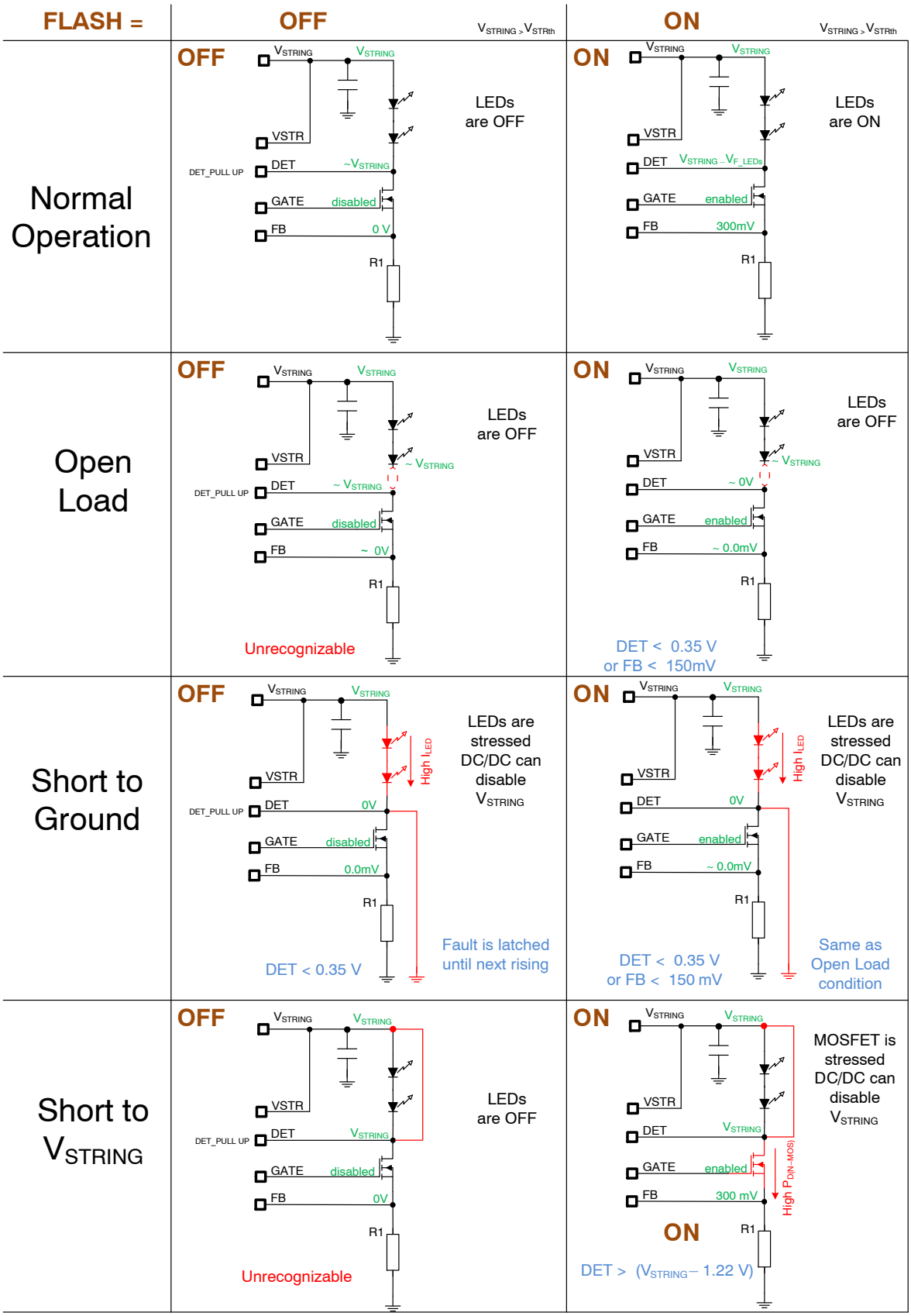

Figure 11. Overview of the Faults

1
SCALE 2:1

DFNW10, 3x3, 0.5P
CASE 507AG
ISSUE B

DATE 14 APR 2020

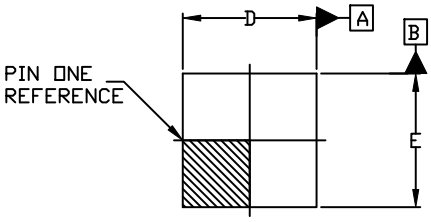

TOP VIEW

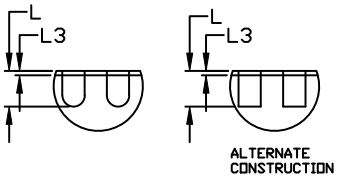

DETAIL A

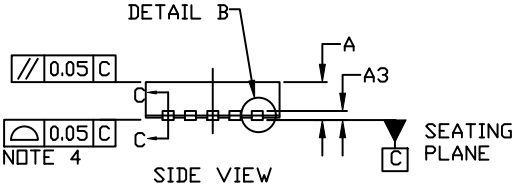

SIDE VIEW

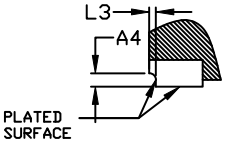

SECTION C-C

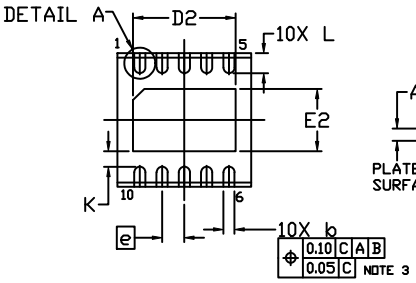

BOTTOM VIEW

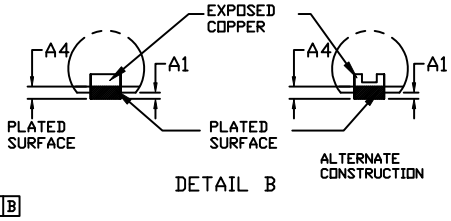

DETAIL B

NOTES:

1. DIMENSIONING AND TOLERANCING PER ASME Y14.5M, 2009.
2. CONTROLLING DIMENSION: MILLIMETERS
3. DIMENSION b APPLIES TO PLATED TERMINALS AND IS MEASURED BETWEEN 0.15 AND 0.30MM FROM THE TERMINAL TIP.
4. COPLANARITY APPLIES TO THE EXPOSED PAD AS WELL AS THE TERMINALS.
5. THIS DEVICE CONTAINS WETTABLE FLANK DESIGN FEATURES TO AID IN FILLET FORMATION ON THE LEADS DURING MOUNTING.

DIM	MILLIMETERS		
	MIN.	NOM.	MAX.
A	0.80	0.85	0.90
A1	0.00	---	0.05
A3	0.20 REF		
A4	0.10	---	---
b	0.20	0.25	0.30
D	2.90	3.00	3.10
D2	2.20	2.30	2.40
E	2.90	3.00	3.10
E2	1.30	1.40	1.50
e	0.50 BSC		
K	0.35 REF		
L	0.35	0.45	0.55
L3	---	---	0.09

GENERIC
MARKING DIAGRAM*

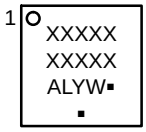

XXXXX = Specific Device Code
A = Assembly Location
L = Wafer Lot
Y = Year
W = Work Week
▪ = Pb−Free Package

(Note: Microdot may be in either location)

*This information is generic. Please refer to device data sheet for actual part marking. Pb−Free indicator, “G” or microdot “ ▪”, may or may not be present. Some products may not follow the Generic Marking.

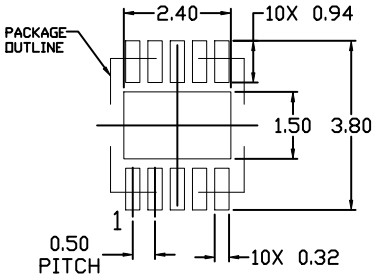

RECOMMENDED
MOUNTING FOOTPRINT

* For additional information on our Pb-Free strategy and soldering details, please download the ON Semiconductor Soldering and Mounting Techniques Reference Manual, SOLDERRM/D.

DOCUMENT NUMBER:	**98AON73716G**	Electronic versions are uncontrolled except when accessed directly from the Document Repository. Printed versions are uncontrolled except when stamped “CONTROLLED COPY” in red.
DESCRIPTION:	**DFNW10, 3x3, 0.5P**	**PAGE 1 OF 1**

onsemi and onsemi are trademarks of Semiconductor Components Industries, LLC dba **onsemi** or its subsidiaries in the United States and/or other countries. **onsemi** reserves the right to make changes without further notice to any products herein. **onsemi** makes no warranty, representation or guarantee regarding the suitability of its products for any particular purpose, nor does **onsemi** assume any liability arising out of the application or use of any product or circuit, and specifically disclaims any and all liability, including without limitation special, consequential or incidental damages. **onsemi** does not convey any license under its patent rights nor the rights of others.

onsemi, onsemi, and other names, marks, and brands are registered and/or common law trademarks of Semiconductor Components Industries, LLC dba "**onsemi**" or its affiliates and/or subsidiaries in the United States and/or other countries. **onsemi** owns the rights to a number of patents, trademarks, copyrights, trade secrets, and other intellectual property. A listing of **onsemi**'s product/patent coverage may be accessed at www.onsemi.com/site/pdf/Patent−Marking.pdf. **onsemi** reserves the right to make changes at any time to any products or information herein, without notice. The information herein is provided "as−is" and **onsemi** makes no warranty, representation or guarantee regarding the accuracy of the information, product features, availability, functionality, or suitability of its products for any particular purpose, nor does **onsemi** assume any liability arising out of the application or use of any product or circuit, and specifically disclaims any and all liability, including without limitation special, consequential or incidental damages. Buyer is responsible for its products and applications using **onsemi** products, including compliance with all laws, regulations and safety requirements or standards, regardless of any support or applications information provided by **onsemi**. "Typical" parameters which may be provided in **onsemi** data sheets and/or specifications can and do vary in different applications and actual performance may vary over time. All operating parameters, including "Typicals" must be validated for each customer application by customer's technical experts. **onsemi** does not convey any license under any of its intellectual property rights nor the rights of others. **onsemi** products are not designed, intended, or authorized for use as a critical component in life support systems or any FDA Class 3 medical devices or medical devices with a same or similar classification in a foreign jurisdiction or any devices intended for implantation in the human body. Should Buyer purchase or use **onsemi** products for any such unintended or unauthorized application, Buyer shall indemnify and hold **onsemi** and its officers, employees, subsidiaries, affiliates, and distributors harmless against all claims, costs, damages, and expenses, and reasonable attorney fees arising out of, directly or indirectly, any claim of personal injury or death associated with such unintended or unauthorized use, even if such claim alleges that **onsemi** was negligent regarding the design or manufacture of the part. **onsemi** is an Equal Opportunity/Affirmative Action Employer. This literature is subject to all applicable copyright laws and is not for resale in any manner.

ADDITIONAL INFORMATION

TECHNICAL PUBLICATIONS:
Technical Library: www.onsemi.com/design/resources/technical−documentation
onsemi Website: www.onsemi.com

ONLINE SUPPORT: www.onsemi.com/support
For additional information, please contact your local Sales Representative at
www.onsemi.com/support/sales