NSR0340V2

Schottky Barrier Diode

Schottky barrier diodes are optimized for very low forward voltage drop and low leakage current and are used in a wide range of dc−dc converter, clamping and protection applications in portable devices. NSR0340V2 in a SOD−523 miniature package enables designers to meet the challenging task of achieving higher efficiency and meeting reduced space requirements.

Features

- Very Low Forward Voltage Drop − 410 mV @ 100 mA
- Low Reverse Current − 0.5 μA @ 25 V V_R
- 250 mA of Continuous Forward Current
- Power Dissipation of 200 mW with Minimum Trace
- Very High Switching Speed
- Low Capacitance − C_T = 6 pF
- This is a Pb−Free Device

Typical Applications

- LCD and Keypad Backlighting
- Camera Photo Flash
- Buck and Boost dc−dc Converters
- Reverse Voltage and Current Protection
- Clamping & Protection

Markets

- Mobile Handsets
- MP3 Players
- Digital Camera and Camcorders
- Notebook PCs and PDAs
- GPS

MAXIMUM RATINGS

Rating	Symbol	Value	Unit
Reverse Voltage	V_R	40	Vdc
Forward Continuous Current (DC)	I_F	250	mA
Non−Repetitive Peak Forward Surge Current	I_{FSM}	1.0	A
ESD Rating: Human Body Model Machine Model	ESD	Class 2 Class A	

Stresses exceeding Maximum Ratings may damage the device. Maximum Ratings are stress ratings only. Functional operation above the Recommended Operating Conditions is not implied. Extended exposure to stresses above the Recommended Operating Conditions may affect device reliability.

ON Semiconductor®

http://onsemi.com

40 VOLT SCHOTTKY BARRIER DIODE

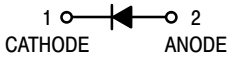

SOD−523
CASE 502

MARKING DIAGRAM

AD = Device Code
M = Date Code*
▪ = Pb−Free Package
(Note: Microdot may be in either location)

*Date Code orientation position may vary depending upon manufacturing location.

ORDERING INFORMATION

Device	Package	Shipping†
NSR0340V2T1G	SOD−523 (Pb−Free)	3000 / Tape & Reel
NSR0340V2T5G	SOD−523 (Pb−Free)	8000 / Tape & Reel

†For information on tape and reel specifications, including part orientation and tape sizes, please refer to our Tape and Reel Packaging Specifications Brochure, BRD8011/D.

© Semiconductor Components Industries, LLC, 2013

June, 2013 − Rev. 1
Publication Order Number:
NSR0340V2T1/D

THERMAL CHARACTERISTICS

Characteristic	Symbol	Max	Unit
Thermal Resistance Junction−to−Ambient (Note 1) Total Power Dissipation @ T_A = 25°C	$R_{\theta JA}$ P_D	600 200	°C/W mW
Thermal Resistance Junction−to−Ambient (Note 2) Total Power Dissipation @ T_A = 25°C	$R_{\theta JA}$ P_D	300 400	°C/W mW
Junction and Storage Temperature Range	T_J, T_{stg}	−55 to +150	°C

1. Mounted onto a 4 in square FR−4 board 10 mm sq. 1 oz. Cu 0.06” thick single−sided. Operating to steady state.
2. Mounted onto a 4 in square FR−4 board 1 in sq. 1 oz. Cu 0.06” thick single−sided. Operating to steady state.

ELECTRICAL CHARACTERISTICS (T_A = 25°C unless otherwise noted)

Characteristic	Symbol	Min	Typ	Max	Unit
Reverse Leakage (V_R = 10 V) (V_R = 25 V) (V_R = 40 V)	I_R		 0.2 0.5 1.5	 1.0 3.0 6.0	μA
Forward Voltage (I_F = 10 mA) (I_F = 100 mA) (I_F = 200 mA)	V_F		 310 410 470	 350 450 510	mV
Total Capacitance (V_R = 10 V, f = 1 MHz)	CT		 6.0		pF
Reverse Recovery Time (I_F = I_R = 10 mA, I_R = 1.0 mA)	t_{rr}		 5.0		ns

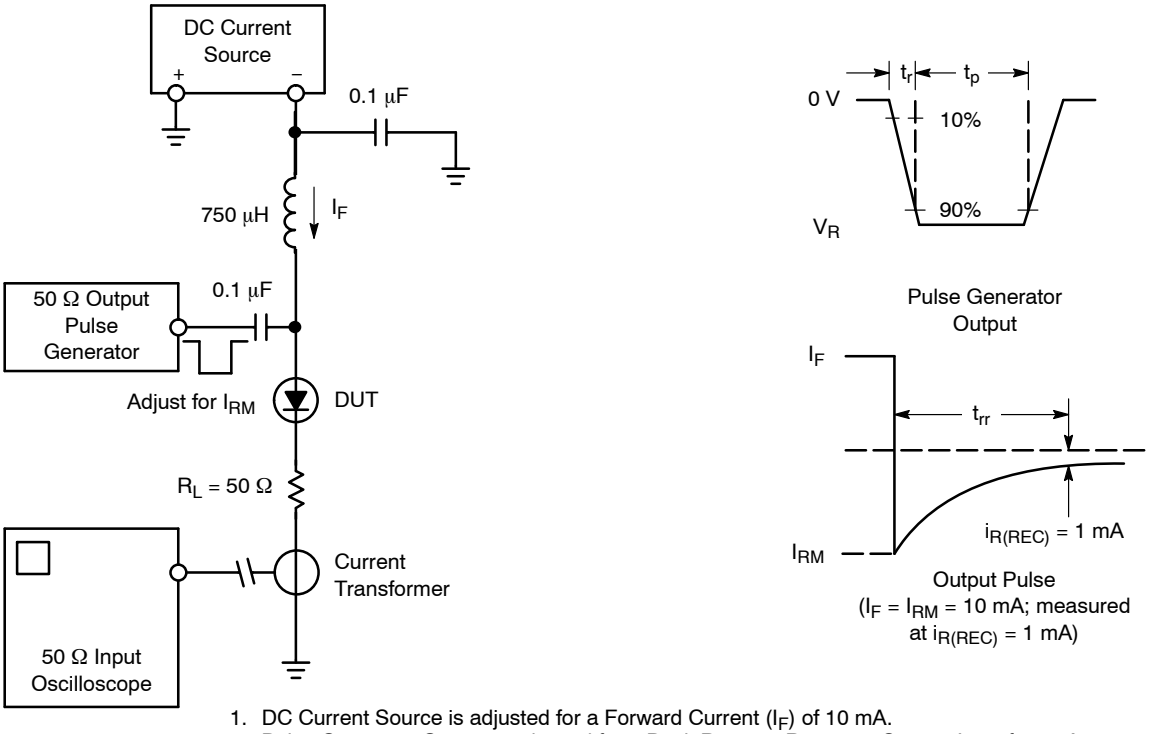

1. DC Current Source is adjusted for a Forward Current (I_F) of 10 mA.
2. Pulse Generator Output is adjusted for a Peak Reverse Recovery Current I_{RM} of 10 mA.
3. Pulse Generator transition time << t_{rr}.
4. $I_{R(REC)}$ is measured at 1 mA. Typically 0.1 X I_{RM} or 0.25 X I_{RM}.
5. t_p » t_{rr}

Figure 1. Recovery Time Equivalent Test Circuit

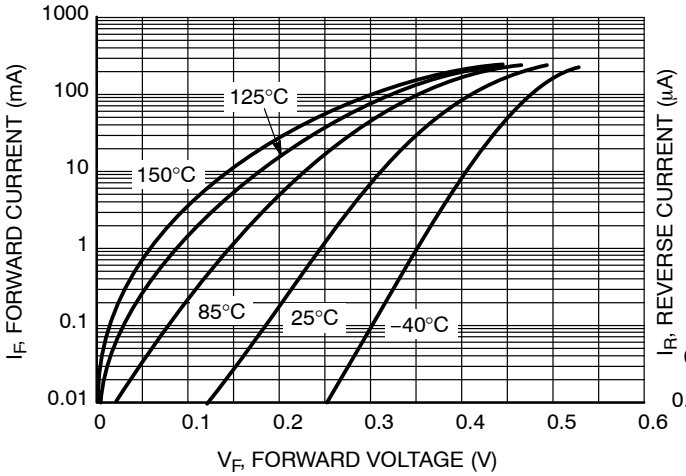

Figure 2. Forward Voltage

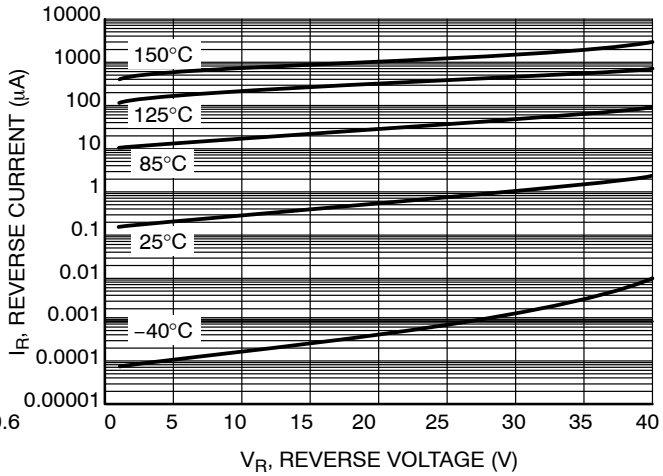

Figure 3. Leakage Current

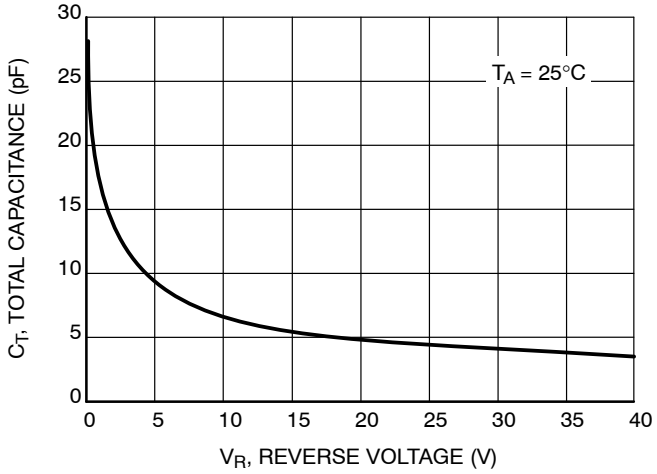

Figure 4. Total Capacitance

onsemi, onsemi, and other names, marks, and brands are registered and/or common law trademarks of Semiconductor Components Industries, LLC dba "**onsemi**" or its affiliates and/or subsidiaries in the United States and/or other countries. **onsemi** owns the rights to a number of patents, trademarks, copyrights, trade secrets, and other intellectual property. A listing of **onsemi**'s product/patent coverage may be accessed at www.onsemi.com/site/pdf/Patent−Marking.pdf. **onsemi** reserves the right to make changes at any time to any products or information herein, without notice. The information herein is provided "as−is" and **onsemi** makes no warranty, representation or guarantee regarding the accuracy of the information, product features, availability, functionality, or suitability of its products for any particular purpose, nor does **onsemi** assume any liability arising out of the application or use of any product or circuit, and specifically disclaims any and all liability, including without limitation special, consequential or incidental damages. Buyer is responsible for its products and applications using **onsemi** products, including compliance with all laws, regulations and safety requirements or standards, regardless of any support or applications information provided by **onsemi**. "Typical" parameters which may be provided in **onsemi** data sheets and/or specifications can and do vary in different applications and actual performance may vary over time. All operating parameters, including "Typicals" must be validated for each customer application by customer's technical experts. **onsemi** does not convey any license under any of its intellectual property rights nor the rights of others. **onsemi** products are not designed, intended, or authorized for use as a critical component in life support systems or any FDA Class 3 medical devices or medical devices with a same or similar classification in a foreign jurisdiction or any devices intended for implantation in the human body. Should Buyer purchase or use **onsemi** products for any such unintended or unauthorized application, Buyer shall indemnify and hold **onsemi** and its officers, employees, subsidiaries, affiliates, and distributors harmless against all claims, costs, damages, and expenses, and reasonable attorney fees arising out of, directly or indirectly, any claim of personal injury or death associated with such unintended or unauthorized use, even if such claim alleges that **onsemi** was negligent regarding the design or manufacture of the part. **onsemi** is an Equal Opportunity/Affirmative Action Employer. This literature is subject to all applicable copyright laws and is not for resale in any manner.

ADDITIONAL INFORMATION

TECHNICAL PUBLICATIONS:
Technical Library: www.onsemi.com/design/resources/technical−documentation
onsemi Website: www.onsemi.com

ONLINE SUPPORT: www.onsemi.com/support
For additional information, please contact your local Sales Representative at
www.onsemi.com/support/sales