General-Purpose Rectifiers

S3A-S3N

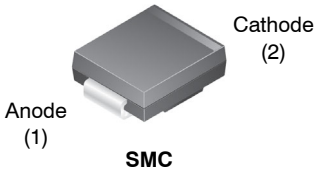

SMC
CASE 403AG

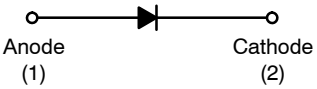

Features

- Low−Profile Package
- Glass−Passivated Junction
- UL Flammability Classification: 94V−0
- UL Certified, UL #E258596
- These are Pb−Free Devices

ABSOLUTE MAXIMUM RATINGS (T_A = 25°C unless otherwise noted)

Symbol	Parameter	Value								Unit
		S3A	S3B	S3D	S3G	S3J	S3K	S3M	S3N	
V_{RRM}	Maximum Repetitive Reverse Voltage	50	100	200	400	600	800	1000	1200	V
V_{RMS}	RMS Reverse Voltage	35	70	140	280	420	560	700	840	V
V_R	DC Blocking Voltage	50	100	200	400	600	800	1000	1200	V
$I_{F(AV)}$	Average Rectified Forward Current T_L = 105°C	3.0								A
I_{FSM}	Non-Repetitive Peak Forward Surge Current 8.3 ms Single Half-Sine-Wave	100								A
T_{STG}	Storage Temperature Range	−55 to +150								°C
T_J	Operating Junction Temperature Range	−55 to +150								°C

Stresses exceeding those listed in the Maximum Ratings table may damage the device. If any of these limits are exceeded, device functionality should not be assumed, damage may occur and reliability may be affected.

MARKING DIAGRAM

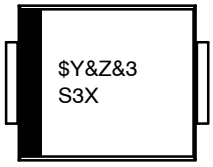

$Y	= **onsemi** Logo
&Z	= Assembly Plant Code
&3	= Numeric Date Code
S3X	= Specific Device Code X = A−N

ORDERING INFORMATION

See detailed ordering and shipping information on page 3 of this data sheet.

THERMAL CHARACTERISTICS (Note 1)

Symbol	Parameter	Value	Unit
P_D	Power Dissipation	2.6	W
$R_{\theta JA}$	Thermal Resistance, Junction-to-Ambient	100	°C/W
$R_{\theta JL}$	Thermal Resistance, Junction-to-Lead	13	°C/W

1. Device is mounted on FR−4 PCB 0.013 mm. Land pattern size: refer to the package drawing. Trace size: force line = 50 mil & sense line = 4 mil.

ELECTRICAL CHARACTERISTICS (T_A = 25°C unless otherwise noted (per leg))

Symbol	Parameter	Conditions	Value								Unit
			S3A	S3B	S3D	S3G	S3J	S3K	S3M	S3N	
V_F	Maximum Forward Voltage	I_F = 3.0 A	1.2								V
t_{rr}	Typical Reverse Recovery Time	I_F = 0.5 A, I_R = 1.0 A, I_{rr} = 0.25 A	2.5								μs
I_R	Maximum Reverse Current at Rated V_R	T_A = 25°C	5								μA
		T_A = 125°C	250								
C_T	Typical Total Capacitance	V_R = 4.0 V, f = 1.0 MHz	60								pF

Product parametric performance is indicated in the Electrical Characteristics for the listed test conditions, unless otherwise noted. Product performance may not be indicated by the Electrical Characteristics if operated under different conditions.

© Semiconductor Components Industries, LLC, 2001

TYPICAL PERFORMANCE CHARACTERISTICS

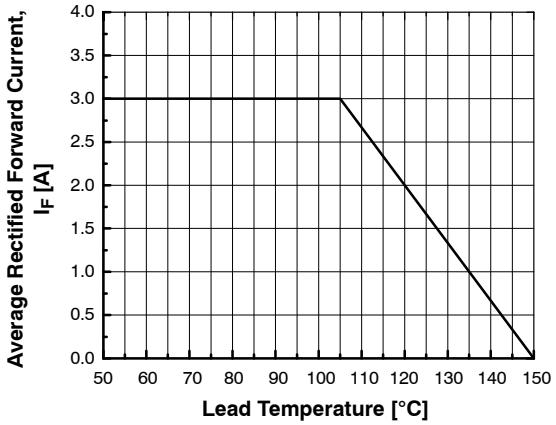

Figure 1. Forward Current Derating Curve

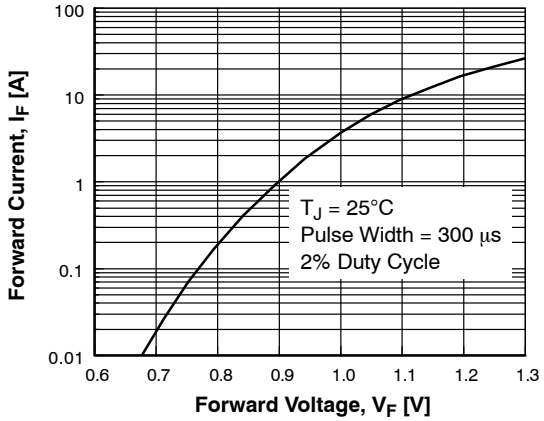

Figure 2. Forward Voltage Characteristics

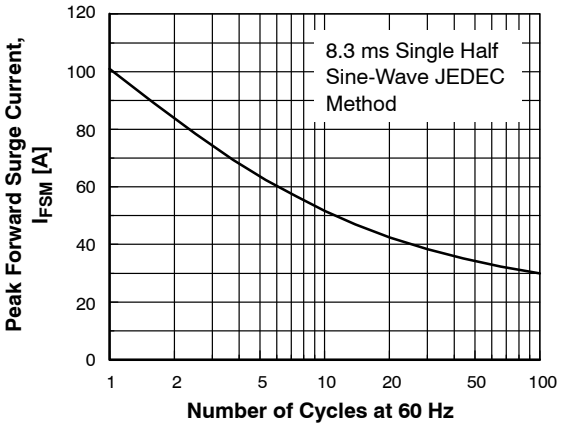

Figure 3. Non-Repetitive Surge Current

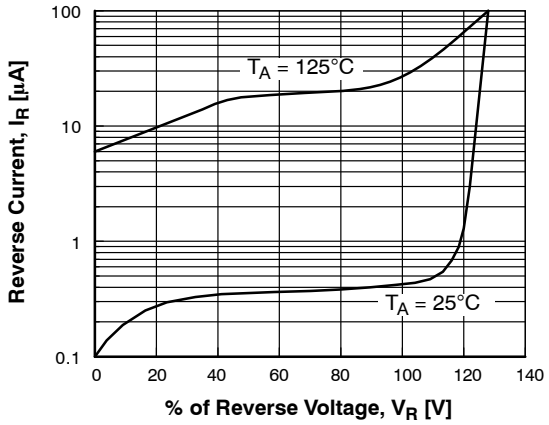

Figure 4. Reverse Current vs. Reverse Voltage

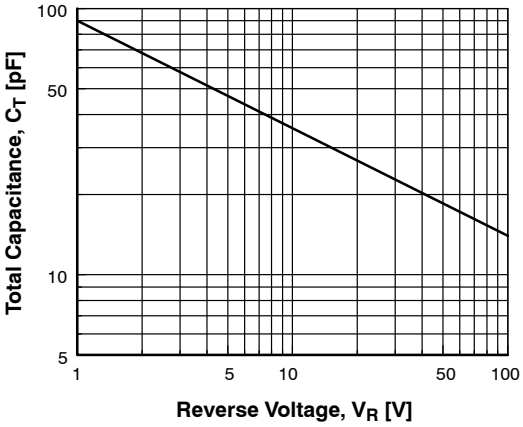

Figure 5. Total Capacitance

ORDERING INFORMATION

Part Number	Top Marking	Package	Shipping†
S3A	S3A	DO−214AB (SMC) (Pb−Free)	3000 / Tape & Reel
S3B	S3B		
S3D	S3D		
S3G	S3G		
S3J	S3J		
S3K	S3K		
S3M	S3M		
S3N	S3N		

†For information on tape and reel specifications, including part orientation and tape sizes, please refer to our Tape and Reel Packaging Specifications Brochure, BRD8011/D.

SMC
CASE 403AG
ISSUE O

DATE 31 AUG 2016

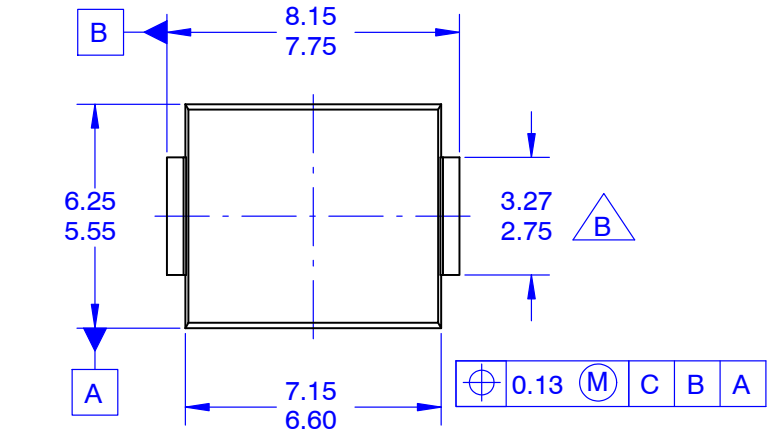

TOP VIEW

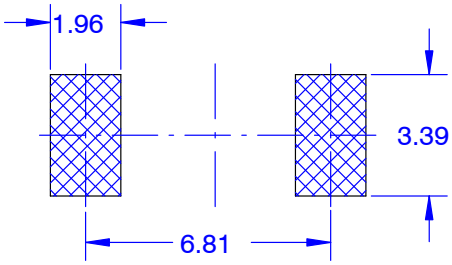

LAND PATTERN RECOMMENDATION

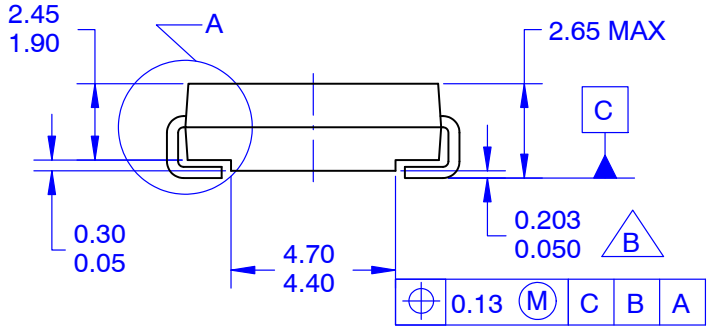

SIDE VIEW

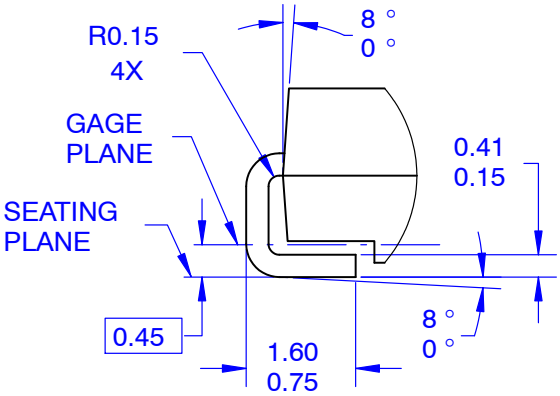

DETAIL A
SCALE 2:1

NOTES:

A. EXCEPT WHERE NOTED, CONFORMS TO JEDEC DO−214, VARIATION AB

B. DOES NOT COMPLY TO JEDEC STD. VALUE
C. ALL DIMENSIONS ARE IN MILLIMETERS
D. DIMENSIONS ARE EXCLUSIVE OF BURRS, MOLD FLASH, AND TIE BAR PROTRUSIONS.
E. DIMENSIONS AND TOLERANCING AS PER ASME Y14.5−2009
F. LAND PATTERN STANDARD: DIOM7957X241M

DOCUMENT NUMBER:	**98AON13442G**	Electronic versions are uncontrolled except when accessed directly from the Document Repository. Printed versions are uncontrolled except when stamped "CONTROLLED COPY" in red.
DESCRIPTION:	**SMC**	**PAGE 1 OF 1**

onsemi and onsemi are trademarks of Semiconductor Components Industries, LLC dba **onsemi** or its subsidiaries in the United States and/or other countries. **onsemi** reserves the right to make changes without further notice to any products herein. **onsemi** makes no warranty, representation or guarantee regarding the suitability of its products for any particular purpose, nor does **onsemi** assume any liability arising out of the application or use of any product or circuit, and specifically disclaims any and all liability, including without limitation special, consequential or incidental damages. **onsemi** does not convey any license under its patent rights nor the rights of others.

onsemi, onsemi, and other names, marks, and brands are registered and/or common law trademarks of Semiconductor Components Industries, LLC dba "**onsemi**" or its affiliates and/or subsidiaries in the United States and/or other countries. **onsemi** owns the rights to a number of patents, trademarks, copyrights, trade secrets, and other intellectual property. A listing of **onsemi**'s product/patent coverage may be accessed at www.onsemi.com/site/pdf/Patent−Marking.pdf. **onsemi** reserves the right to make changes at any time to any products or information herein, without notice. The information herein is provided "as−is" and **onsemi** makes no warranty, representation or guarantee regarding the accuracy of the information, product features, availability, functionality, or suitability of its products for any particular purpose, nor does **onsemi** assume any liability arising out of the application or use of any product or circuit, and specifically disclaims any and all liability, including without limitation special, consequential or incidental damages. Buyer is responsible for its products and applications using **onsemi** products, including compliance with all laws, regulations and safety requirements or standards, regardless of any support or applications information provided by **onsemi**. "Typical" parameters which may be provided in **onsemi** data sheets and/or specifications can and do vary in different applications and actual performance may vary over time. All operating parameters, including "Typicals" must be validated for each customer application by customer's technical experts. **onsemi** does not convey any license under any of its intellectual property rights nor the rights of others. **onsemi** products are not designed, intended, or authorized for use as a critical component in life support systems or any FDA Class 3 medical devices or medical devices with a same or similar classification in a foreign jurisdiction or any devices intended for implantation in the human body. Should Buyer purchase or use **onsemi** products for any such unintended or unauthorized application, Buyer shall indemnify and hold **onsemi** and its officers, employees, subsidiaries, affiliates, and distributors harmless against all claims, costs, damages, and expenses, and reasonable attorney fees arising out of, directly or indirectly, any claim of personal injury or death associated with such unintended or unauthorized use, even if such claim alleges that **onsemi** was negligent regarding the design or manufacture of the part. **onsemi** is an Equal Opportunity/Affirmative Action Employer. This literature is subject to all applicable copyright laws and is not for resale in any manner.

ADDITIONAL INFORMATION

TECHNICAL PUBLICATIONS:
Technical Library: www.onsemi.com/design/resources/technical−documentation
onsemi Website: www.onsemi.com

ONLINE SUPPORT: www.onsemi.com/support
For additional information, please contact your local Sales Representative at
www.onsemi.com/support/sales