FAN65 Demo Board (High Current Version)

For FAN65008B

VIN: 48V
Vo: 5V, 12V, 28V and 37.5V: IO_MAX: 10A
Fsw: 300kHz
L: 15uH (74439370150)

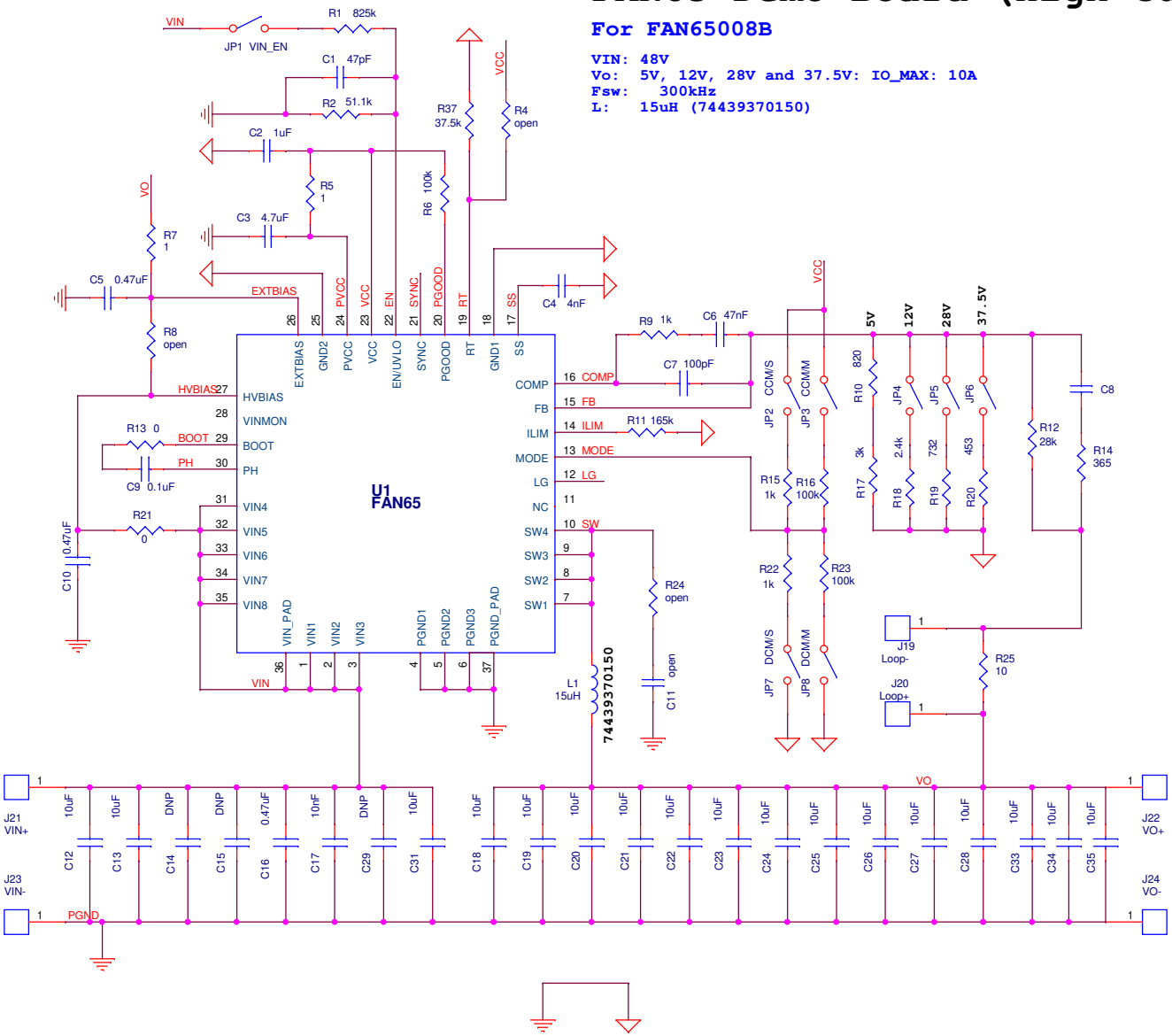

Title	FAN65 Demo Board (Low Current Version)
Size B	Document Number <Doc>
Rev 1.0	
Date: Monday, November 11, 2019	Sheet 1 of 1