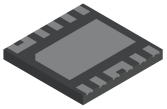

DFN12 3.00x3.00x0.95, 0.50P
CASE 506FD
ISSUE A

DATE 23 APRIL 2024

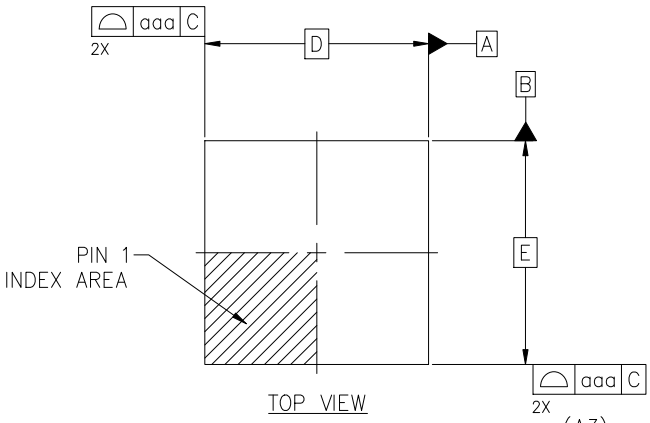

TOP VIEW

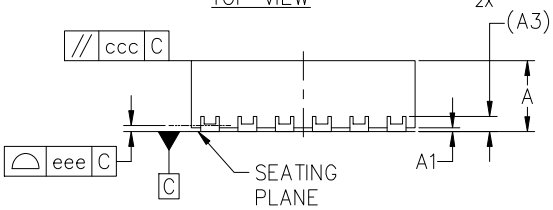

SIDE VIEW

NOTES:

1. DIMENSIONING AND TOLERANCING CONFORM TO ASME Y14.5M−2018.
2. ALL DIMENSIONS ARE IN MILLIMETERS.
3. DIMENSION b APPLIES TO PLATED TERMINAL AND IS MEASURED BETWEEN 0.15 AND 0.30 mm FROM THE TERMINAL TIP.
4. COPLANARITY APPLIES TO THE EXPOSED PAD AS WELL AS THE TERMINALS.

DIM	MILLIMETERS		
	MIN	NOM	MAX
A	0.90	0.95	1.00
A1	---	---	0.05
A3	0.20 REF.		
b	0.20	0.25	0.30
D	3.00 BSC		
D2	2.40	2.50	2.60
E	3.00 BSC		
E2	1.40	1.50	1.60
e	0.50 BSC		
k	0.35 REF.		
L	0.30	0.40	0.50
L1	0.25 REF.		
TOLERANCES FOR CONTROL FEATURE FRAME			
aaa	0.15		
bbb	0.10		
ccc	0.10		
ddd	0.05		
eee	0.08		

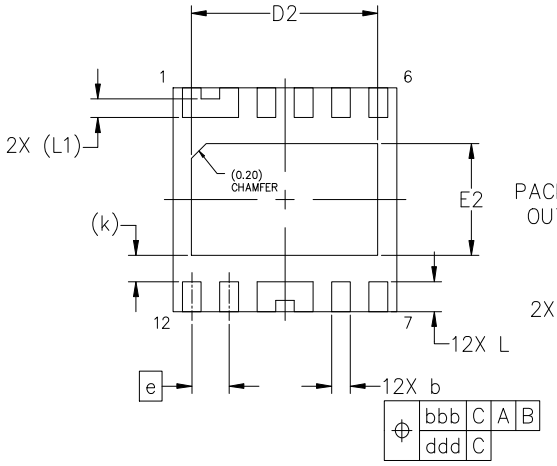

BOTTOM VIEW

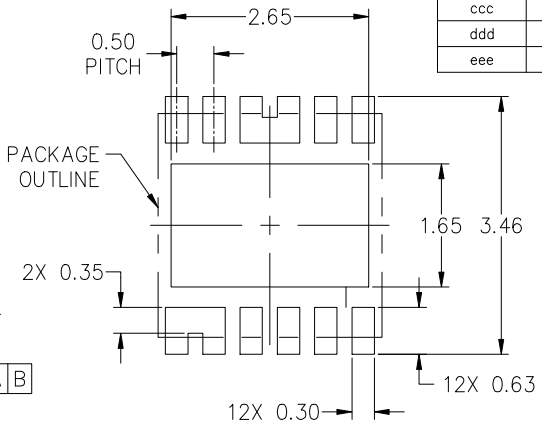

RECOMMENDED MOUNTING FOOTPRINT*
*FOR ADDITIONAL INFORMATION ON OUR Pb−FREE STRATEGY AND SOLDERING DETAILS, PLEASE DOWNLOAD THE ONSEMI SOLDERING AND MOUNTING TECHNIQUES REFERENCE MANUAL, SOLDERRM/D.

GENERIC MARKING DIAGRAM*

XXXXXX
XXXXXX
AWLYWW
o

XXXX = Specific Device Code
A = Assembly Location
WL = Wafer Lot
Y = Year
WW = Work Week

*This information is generic. Please refer to device data sheet for actual part marking. Pb−Free indicator, “G” or microdot “▪”, may or may not be present. Some products may not follow the Generic Marking.

DOCUMENT NUMBER:	98AON42269H	Electronic versions are uncontrolled except when accessed directly from the Document Repository. Printed versions are uncontrolled except when stamped “CONTROLLED COPY” in red.	
DESCRIPTION:	DFN12 3.00x3.00x0.95, 0.50P		PAGE 1 OF 1

onsemi and onsemi are trademarks of Semiconductor Components Industries, LLC dba **onsemi** or its subsidiaries in the United States and/or other countries. **onsemi** reserves the right to make changes without further notice to any products herein. **onsemi** makes no warranty, representation or guarantee regarding the suitability of its products for any particular purpose, nor does **onsemi** assume any liability arising out of the application or use of any product or circuit, and specifically disclaims any and all liability, including without limitation special, consequential or incidental damages. **onsemi** does not convey any license under its patent rights nor the rights of others.