Analog Multiplexers / Demultiplexers

High−Performance Silicon−Gate CMOS

MC74VHC4051, MC74VHC4052, MC74VHC4053

The MC74VHC4051, MC74VHC4052 and MC74VHC4053 utilize silicon−gate CMOS technology to achieve fast propagation delays, low ON resistances, and low OFF leakage currents. These analog multiplexers/demultiplexers control analog voltages that may vary across the complete power supply range (from V_{CC} to V_{EE}).

The VHC4051, VHC4052 and VHC4053 are identical in pinout to the high−speed HC4051A, HC4052A and HC4053A, and the metal−gate MC14051B, MC14052B and MC14053B. The Channel−Select inputs determine which one of the Analog Inputs/Outputs is to be connected, by means of an analog switch, to the Common Output/Input. When the Enable pin is HIGH, all analog switches are turned off.

The Channel−Select and Enable inputs are compatible with standard CMOS outputs; with pullup resistors they are compatible with LSTTL outputs.

These devices have been designed so that the ON resistance (R_{on}) is more linear over input voltage than R_{on} of metal−gate CMOS analog switches.

- Fast Switching and Propagation Speeds
- Low Crosstalk Between Switches
- Diode Protection on All Inputs/Outputs
- Analog Power Supply Range ($V_{CC} - V_{EE}$) = 2.0 to 12.0 V
- Digital (Control) Power Supply Range (V_{CC} − GND) = 2.0 to 6.0 V
- Improved Linearity and Lower ON Resistance Than Metal−Gate Counterparts
- Low Noise
- Chip Complexity: VHC4051 — 184 FETs or 46 Equivalent Gates
  VHC4052 — 168 FETs or 42 Equivalent Gates
  VHC4053 — 156 FETs or 39 Equivalent Gates
- NLV Prefix for Automotive and Other Applications Requiring Unique Site and Control Change Requirements; AEC−Q100 Qualified and PPAP Capable
- These Devices are Pb−Free, Halogen Free/BFR Free and are RoHS Compliant

ON Semiconductor

www.onsemi.com

MARKING DIAGRAMS

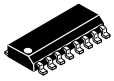

SOIC−16
D SUFFIX
CASE 751B

TSSOP−16
DT SUFFIX
CASE 948F

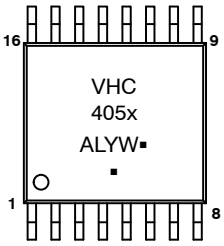

VHC405x	= Specific Device Code (x = 1, 2 or 3)
A	= Assembly Location
L, WL	= Wafer Lot
Y, YY	= Year
W, WW	= Work Week
G or ▪	= Pb−Free Package

(Note: Microdot may be in either location)

ORDERING INFORMATION

See detailed ordering and shipping information in the package dimensions section on page 16 of this data sheet.

© Semiconductor Components Industries, LLC, 2014

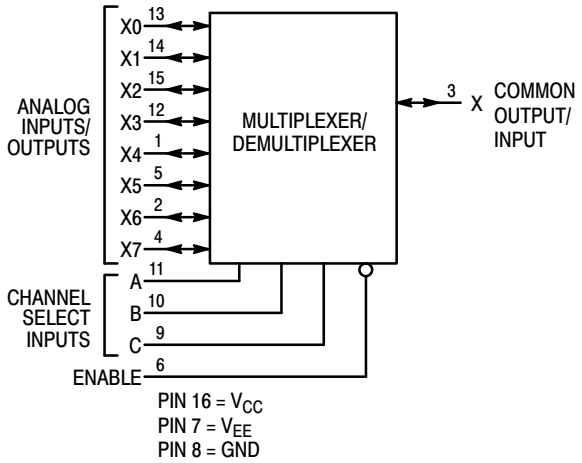

MC74VHC4051
Single−Pole, 8−Position Plus Common Off

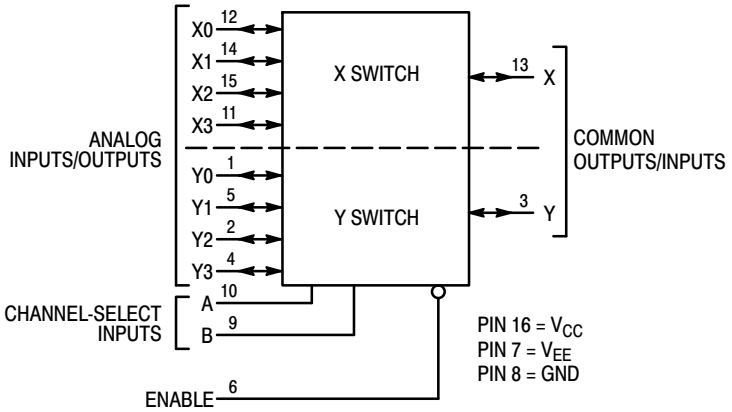

MC74VHC4052
Double−Pole, 4−Position Plus Common Off

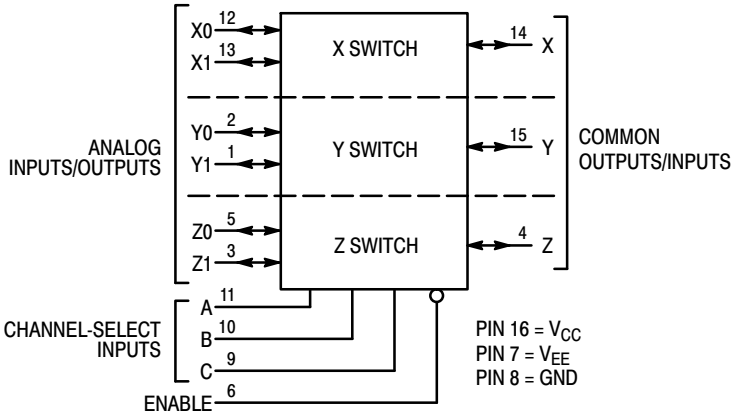

NOTE: This device allows independent control of each switch. Channel−Select Input A controls the X−Switch, Input B controls the Y−Switch and Input C controls the Z−Switch

MC74VHC4053
Triple Single−Pole, Double−Position Plus Common Off

Figure 1. Logic Diagrams

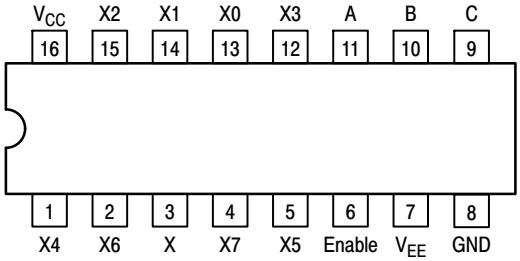

Figure 2. Pinout: MC74VHC4051 (Top View)

FUNCTION TABLE – MC74VHC4051

Control Inputs				
	Select			
Enable	C	B	A	ON Channels
L	L	L	L	X0
L	L	L	H	X1
L	L	H	L	X2
L	L	H	H	X3
L	H	L	L	X4
L	H	L	H	X5
L	H	H	L	X6
L	H	H	H	X7
H	X	X	X	NONE

X = Don't Care

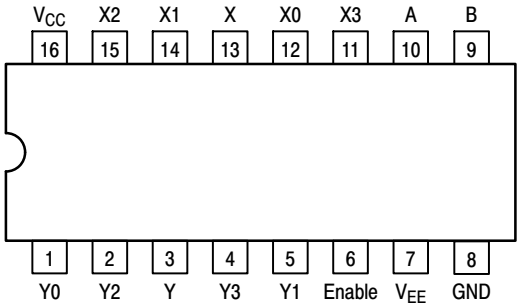

Figure 3. Pinout: MC74VHC4052 (Top View)

FUNCTION TABLE – MC74VHC4052

Control Inputs				
	Select			
Enable	B	A	ON Channels	
L	L	L	Y0	X0
L	L	H	Y1	X1
L	H	L	Y2	X2
L	H	H	Y3	X3
H	X	X	NONE	

X = Don't Care

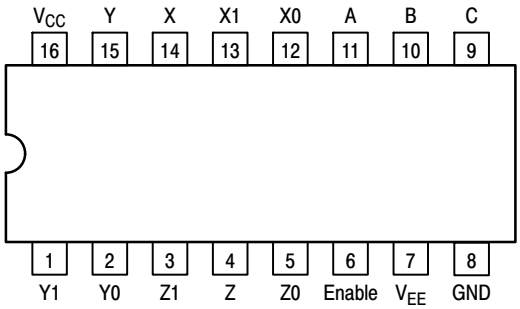

Figure 4. Pinout: MC74VHC4053 (Top View)

FUNCTION TABLE – MC74VHC4053

Control Inputs						
	Select					
Enable	C	B	A	ON Channels		
L	L	L	L	Z0	Y0	X0
L	L	L	H	Z0	Y0	X1
L	L	H	L	Z0	Y1	X0
L	L	H	H	Z0	Y1	X1
L	H	L	L	Z1	Y0	X0
L	H	L	H	Z1	Y0	X1
L	H	H	L	Z1	Y1	X0
L	H	H	H	Z1	Y1	X1
H	X	X	X	NONE		

X = Don't Care

MAXIMUM RATINGS

Symbol	Parameter	Value	Unit
V_{CC}	Positive DC Supply Voltage (Referenced to GND) (Referenced to V_{EE})	– 0.5 to + 7.0 – 0.5 to + 14.0	V
V_{EE}	Negative DC Supply Voltage (Referenced to GND)	– 7.0 to + 5.0	V
V_{IS}	Analog Input Voltage	V_{EE} – 0.5 to V_{CC} + 0.5	V
V_{in}	Digital Input Voltage (Referenced to GND)	– 0.5 to V_{CC} + 0.5	V
I	DC Current, Into or Out of Any Pin	± 25	mA
P_D	Power Dissipation in Still Air SOIC Package† TSSOP Package†	500 450	mW
T_{stg}	Storage Temperature Range	– 65 to + 150	°C
T_L	Lead Temperature, 1 mm from Case for 10 Seconds	260	°C

Stresses exceeding those listed in the Maximum Ratings table may damage the device. If any of these limits are exceeded, device functionality should not be assumed, damage may occur and reliability may be affected.

†Derating — SOIC Package: – 7 mW/°C from 65° to 125°C
TSSOP Package: – 6.1 mW/°C from 65° to 125°C

This device contains protection circuitry to guard against damage due to high static voltages or electric fields. However, precautions must be taken to avoid applications of any voltage higher than maximum rated voltages to this high–impedance circuit. For proper operation, V_{in} and V_{out} should be constrained to the range GND ≤ (V_{in} or V_{out}) ≤ V_{CC}.

Unused inputs must always be tied to an appropriate logic voltage level (e.g., either GND or V_{CC}). Unused outputs must be left open.

RECOMMENDED OPERATING CONDITIONS

Symbol	Parameter	Min	Max	Unit
V_{CC}	Positive DC Supply Voltage (Referenced to GND) (Referenced to V_{EE})	2.0 2.0	6.0 12.0	V
V_{EE}	Negative DC Supply Voltage, Output (Referenced to GND)	– 6.0	GND	V
V_{IS}	Analog Input Voltage	V_{EE}	V_{CC}	V
V_{in}	Digital Input Voltage (Referenced to GND)	GND	V_{CC}	V
V_{IO}*	Static or Dynamic Voltage Across Switch		1.2	V
T_A	Operating Temperature Range, All Package Types	– 55	+ 125	°C
t_r, t_f	Input Rise/Fall Time (Channel Select or Enable Inputs) V_{CC} = 2.0 V V_{CC} = 3.0 V V_{CC} = 4.5 V V_{CC} = 6.0 V	0 0 0 0	1000 800 500 400	ns

Functional operation above the stresses listed in the Recommended Operating Ranges is not implied. Extended exposure to stresses beyond the Recommended Operating Ranges limits may affect device reliability.

*For voltage drops across switch greater than 1.2V (switch on), excessive V_{CC} current may be drawn; i.e., the current out of the switch may contain both V_{CC} and switch input components. The reliability of the device will be unaffected unless the Maximum Ratings are exceeded.

DC CHARACTERISTICS — Digital Section (Voltages Referenced to GND) V_{EE} = GND, Except Where Noted

Symbol	Parameter	Condition	V_{CC} V	Guaranteed Limit −55 to 25°C	≤85°C	≤125°C	Unit
V_{IH}	Minimum High−Level Input Voltage, Channel−Select or Enable Inputs	R_{on} = Per Spec	2.0 3.0 4.5 6.0	1.50 2.10 3.15 4.20	1.50 2.10 3.15 4.20	1.50 2.10 3.15 4.20	V
V_{IL}	Maximum Low−Level Input Voltage, Channel−Select or Enable Inputs	R_{on} = Per Spec	2.0 3.0 4.5 6.0	0.5 0.9 1.35 1.8	0.5 0.9 1.35 1.8	0.5 0.9 1.35 1.8	V
I_{in}	Maximum Input Leakage Current, Channel−Select or Enable Inputs	V_{in} = V_{CC} or GND, V_{EE} = − 6.0 V	6.0	± 0.1	± 1.0	± 1.0	μA
I_{CC}	Maximum Quiescent Supply Current (per Package)	Channel Select, Enable and V_{IS} = V_{CC} or GND; V_{EE} = GND V_{IO} = 0 V V_{EE} = − 6.0	6.0 6.0	1 4	10 40	40 80	μA

DC ELECTRICAL CHARACTERISTICS Analog Section

Symbol	Parameter	Test Conditions	V_{CC} V	V_{EE} V	Guaranteed Limit − 55 to 25°C	≤ 85°C	≤ 125°C	Unit
R_{on}	Maximum "ON" Resistance	V_{in} = V_{IL} or V_{IH} V_{IS} = V_{CC} to V_{EE} I_S ≤ 2.0 mA (Figures 5 through 11)	3.0 4.5 4.5 6.0	0.0 0.0 − 4.5 − 6.0	200 160 120 100	240 200 150 125	320 280 170 140	Ω
		V_{in} = V_{IL} or V_{IH} V_{IS} = V_{CC} or V_{EE} (Endpoints) I_S ≤ 2.0 mA (Figures 5 through11)	3.0 4.5 4.5 6.0	0.0 0.0 − 4.5 − 6.0	150 110 90 80	180 140 120 100	230 190 140 115	
ΔR_{on}	Maximum Difference in "ON" Resistance Between Any Two Channels in the Same Package	V_{in} = V_{IL} or V_{IH} V_{IS} = 1/2 (V_{CC} − V_{EE}) I_S ≤ 2.0 mA	3.0 4.5 4.5 6.0	0.0 0.0 − 4.5 − 6.0	40 20 10 10	50 25 15 12	80 40 18 14	Ω
I_{off}	Maximum Off−Channel Leakage Current, Any One Channel	V_{in} = V_{IL} or V_{IH}; V_{IO} = V_{CC} − V_{EE}; Switch Off (Figure 12)	6.0	− 6.0	0.1	0.5	1.0	μA
	Maximum Off−Channel Leakage Current, Common Channel VHC4051 VHC4052 VHC4053	V_{in} = V_{IL} or V_{IH}; V_{IO} = V_{CC} − V_{EE}; Switch Off (Figure 13)	6.0 6.0 6.0	− 6.0 − 6.0 − 6.0	0.2 0.1 0.1	2.0 1.0 1.0	4.0 2.0 2.0	
I_{on}	Maximum On−Channel Leakage Current, Channel−to−Channel VHC4051 VHC4052 VHC4053	V_{in} = V_{IL} or V_{IH}; Switch−to−Switch = V_{CC} − V_{EE}; (Figure 14)	6.0 6.0 6.0	− 6.0 − 6.0 − 6.0	0.2 0.1 0.1	2.0 1.0 1.0	4.0 2.0 2.0	μA

AC CHARACTERISTICS (C_L = 50 pF, Input $t_r = t_f$ = 6 ns)

Symbol	Parameter	V_{CC} V	Guaranteed Limit −55 to 25°C	≤85°C	≤125°C	Unit
t_{PLH}, t_{PHL}	Maximum Propagation Delay, Channel−Select to Analog Output (Figures 18, 19)	2.0 3.0 4.5 6.0	270 90 59 45	320 110 79 65	350 125 85 75	ns
t_{PLH}, t_{PHL}	Maximum Propagation Delay, Analog Input to Analog Output (Figures 20, 21)	2.0 3.0 4.5 6.0	40 25 12 10	60 30 15 13	70 32 18 15	ns
t_{PLZ}, t_{PHZ}	Maximum Propagation Delay, Enable to Analog Output (Figures 22, 23)	2.0 3.0 4.5 6.0	160 70 48 39	200 95 63 55	220 110 76 63	ns
t_{PZL}, t_{PZH}	Maximum Propagation Delay, Enable to Analog Output (Figures 22, 23)	2.0 3.0 4.5 6.0	245 115 49 39	315 145 69 58	345 155 83 67	ns
C_{in}	Maximum Input Capacitance, Channel−Select or Enable Inputs		10	10	10	pF
$C_{I/O}$	Maximum Capacitance — Analog I/O		35	35	35	pF
	(All Switches Off) — Common O/I: VHC4051 VHC4052 VHC4053		130 80 50	130 80 50	130 80 50	
	Feedthrough		1.0	1.0	1.0	

		Typical @ 25°C, V_{CC} = 5.0 V, V_{EE} = 0 V	
C_{PD}	Power Dissipation Capacitance (Figure 25)* — VHC4051 VHC4052 VHC4053	45 80 45	pF

* Used to determine the no−load dynamic power consumption: $P_D = C_{PD} V_{CC}^2 f + I_{CC} V_{CC}$.

ADDITIONAL APPLICATION CHARACTERISTICS (GND = 0 V)

Symbol	Parameter	Condition	V_{CC} V	V_{EE} V	Limit* 25°C ‘51	‘52	‘53	Unit
BW	Maximum On−Channel Bandwidth or Minimum Frequency Response (Figure 15)	f_{in} = 1MHz Sine Wave; Adjust f_{in} Voltage to Obtain 0dBm at V_{OS}; Increase f_{in} Frequency Until dB Meter Reads −3dB; R_L = 50Ω, C_L = 10pF	2.25	−2.25	80	95	120	MHz
			4.50	−4.50	80	95	120	
			6.00	−6.00	80	95	120	
—	Off−Channel Feedthrough Isolation (Figure 16)	f_{in} = Sine Wave; Adjust f_{in} Voltage to Obtain 0dBm at V_{IS} f_{in} = 10kHz, R_L = 600Ω, C_L = 50pF	2.25	−2.25	−50			dB
			4.50	−4.50	−50			
			6.00	−6.00	−50			
		f_{in} = 1.0MHz, R_L = 50Ω, C_L = 10pF	2.25	−2.25	−40			
			4.50	−4.50	−40			
			6.00	−6.00	−40			
—	Feedthrough Noise. Channel−Select Input to Common I/O (Figure 17)	V_{in} ≤ 1MHz Square Wave (t_r = t_f = 6ns); Adjust R_L at Setup so that I_S = 0A; Enable = GND R_L = 600Ω, C_L = 50pF	2.25	−2.25	25			mV_{PP}
			4.50	−4.50	105			
			6.00	−6.00	135			
		R_L = 10kΩ, C_L = 10pF	2.25	−2.25	35			
			4.50	−4.50	145			
			6.00	−6.00	190			
—	Crosstalk Between Any Two Switches (Figure 24) (Test does not apply to VHC4051)	f_{in} = Sine Wave; Adjust f_{in} Voltage to Obtain 0dBm at V_{IS} f_{in} = 10kHz, R_L = 600Ω, C_L = 50pF	2.25	−2.25	−50			dB
			4.50	−4.50	−50			
			6.00	−6.00	−50			
		f_{in} = 1.0MHz, R_L = 50Ω, C_L = 10pF	2.25	−2.25	−60			
			4.50	−4.50	−60			
			6.00	−6.00	−60			
THD	Total Harmonic Distortion (Figure 26)	f_{in} = 1kHz, R_L = 10kΩ, C_L = 50pF THD = $THD_{measured}$ − THD_{source}						%
		V_{IS} = 4.0V_{PP} sine wave	2.25	−2.25	0.10			
		V_{IS} = 8.0V_{PP} sine wave	4.50	−4.50	0.08			
		V_{IS} = 11.0V_{PP} sine wave	6.00	−6.00	0.05			

*Limits not tested. Determined by design and verified by qualification.

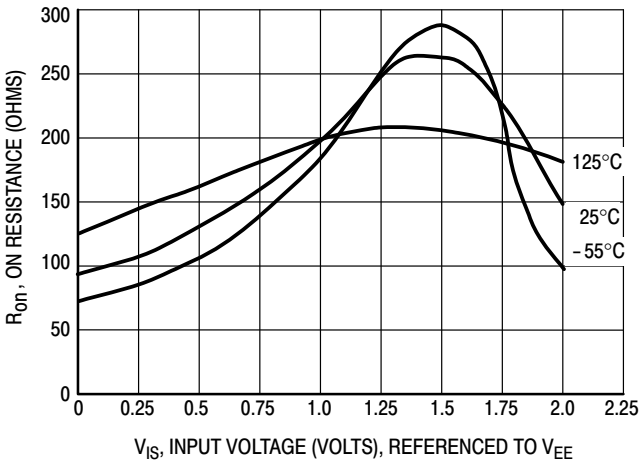

Figure 5. Typical On Resistance, V_{CC} − V_{EE} = 2.0 V

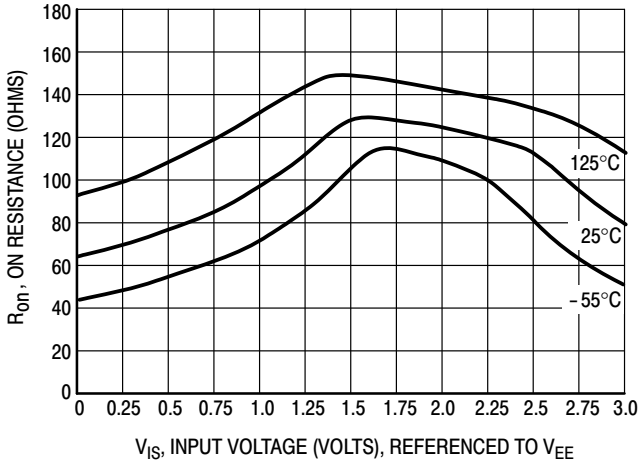

Figure 6. Typical On Resistance, V_{CC} − V_{EE} = 3.0 V

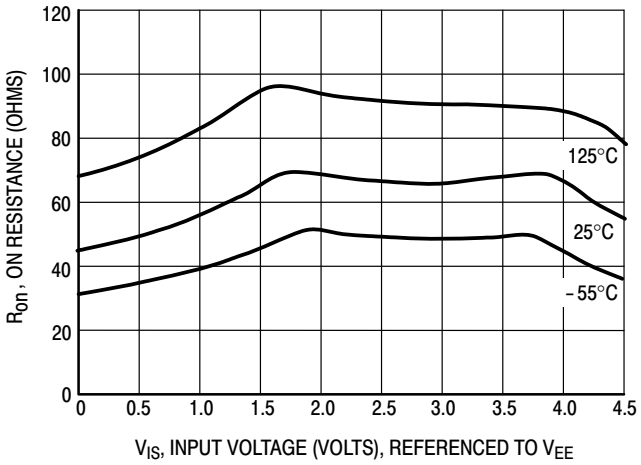

Figure 7. Typical On Resistance, $V_{CC} - V_{EE}$ = 4.5 V

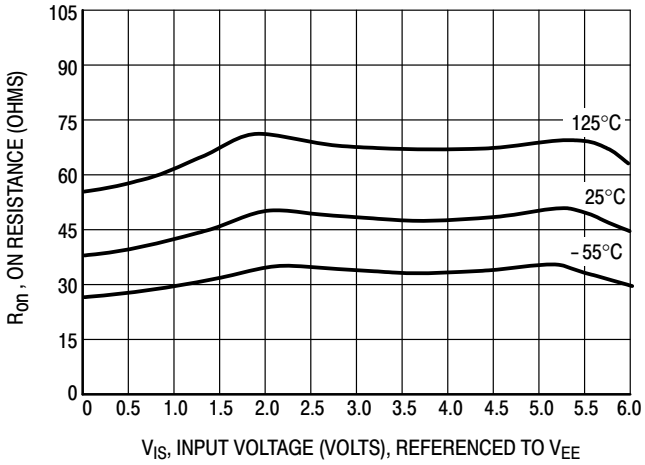

Figure 8. Typical On Resistance, $V_{CC} - V_{EE}$ = 6.0 V

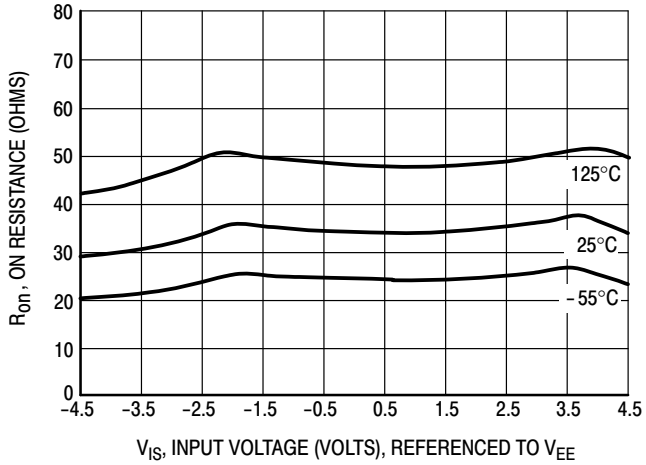

Figure 9. Typical On Resistance, $V_{CC} - V_{EE}$ = 9.0 V

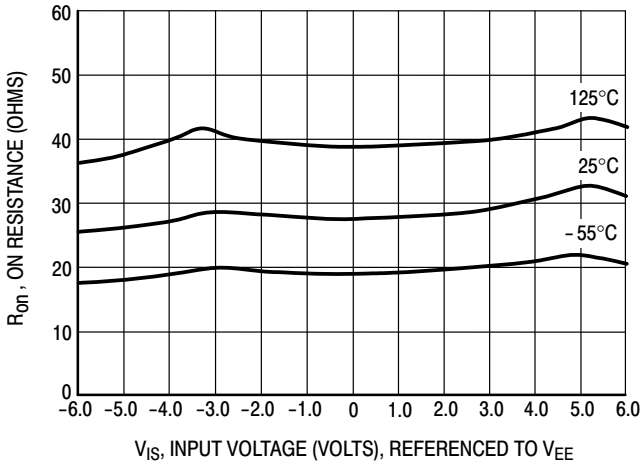

Figure 10. Typical On Resistance, $V_{CC} - V_{EE}$ = 12.0 V

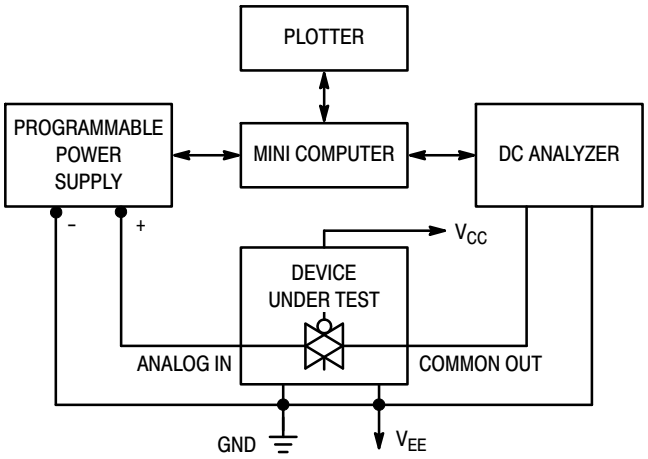

Figure 11. On Resistance Test Set−Up

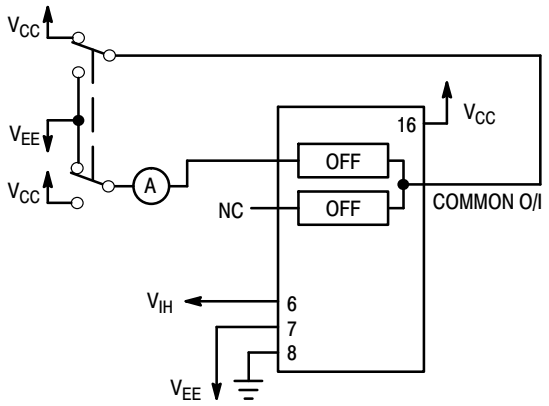

Figure 12. Maximum Off Channel Leakage Current, Any One Channel, Test Set−Up

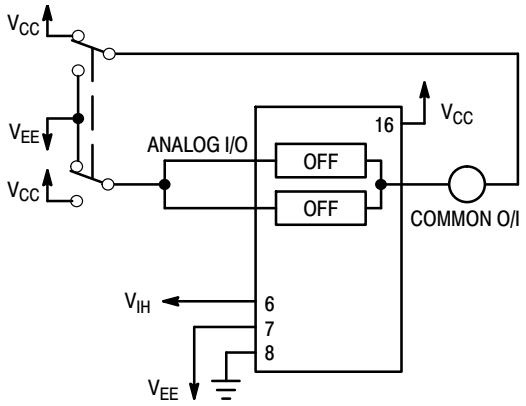

Figure 13. Maximum Off Channel Leakage Current, Common Channel, Test Set−Up

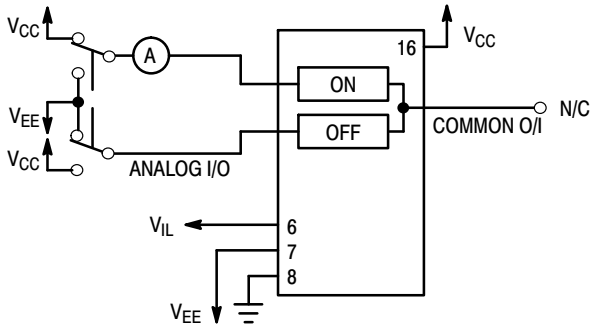

Figure 14. Maximum On Channel Leakage Current, Channel to Channel, Test Set−Up

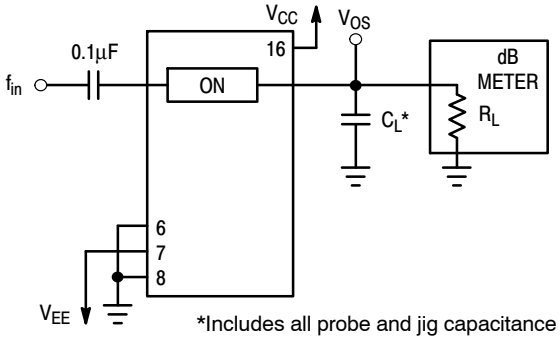

Figure 15. Maximum On Channel Bandwidth, Test Set−Up

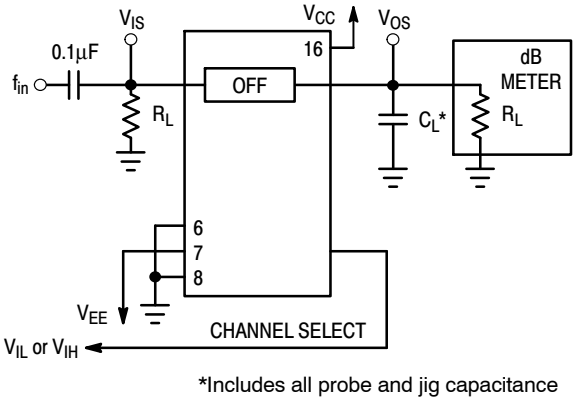

Figure 16. Off Channel Feedthrough Isolation, Test Set−Up

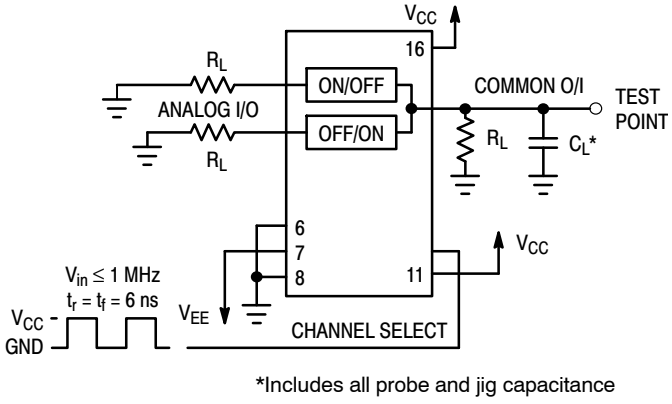

Figure 17. Feedthrough Noise, Channel Select to Common Out, Test Set−Up

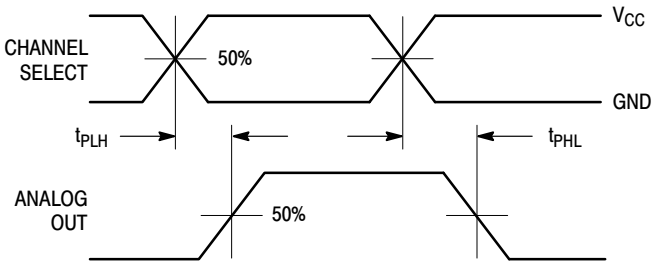

Figure 18. Propagation Delays, Channel Select to Analog Out

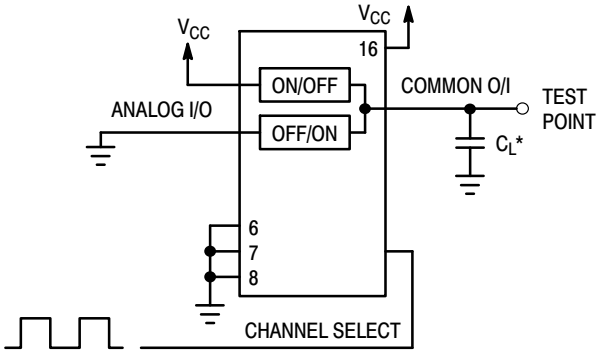

*Includes all probe and jig capacitance

Figure 19. Propagation Delay, Test Set−Up Channel Select to Analog Out

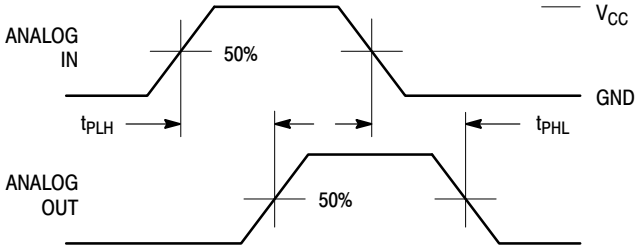

Figure 20. Propagation Delays, Analog In to Analog Out

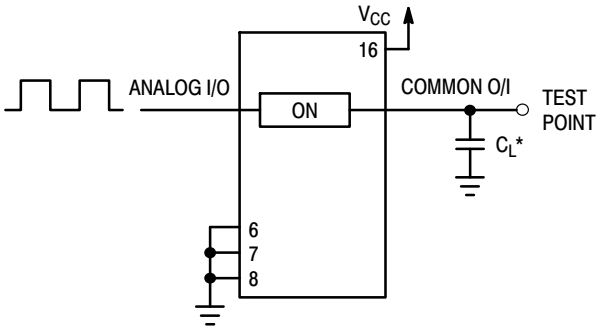

*Includes all probe and jig capacitance

Figure 21. Propagation Delay, Test Set−Up Analog In to Analog Out

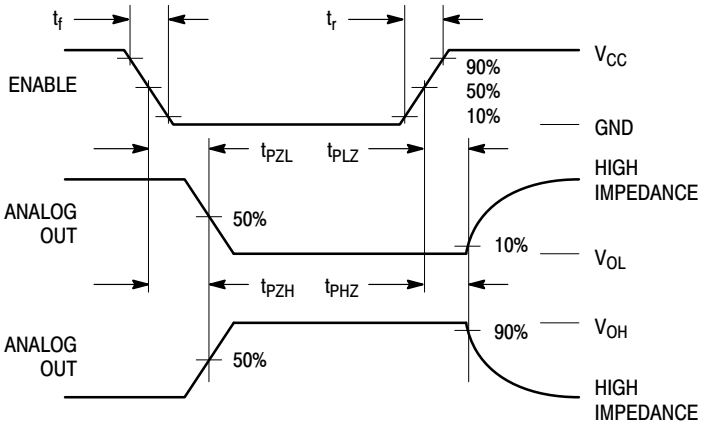

Figure 22. Propagation Delays, Enable to Analog Out

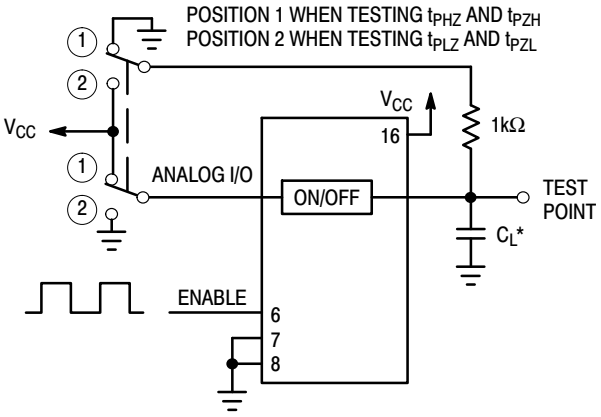

Figure 23. Propagation Delay, Test Set−Up Enable to Analog Out

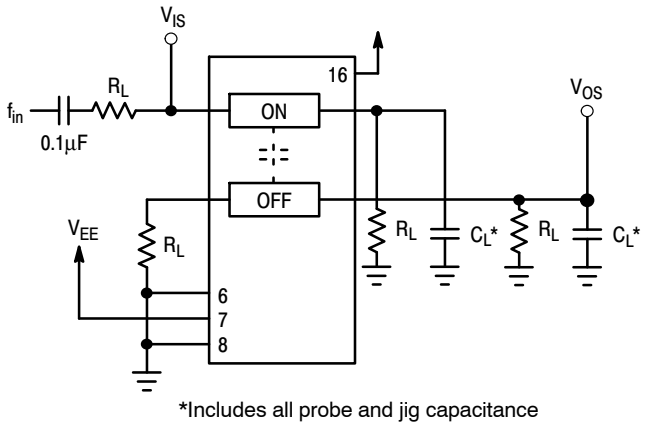

Figure 24. Crosstalk Between Any Two Switches, Test Set−Up

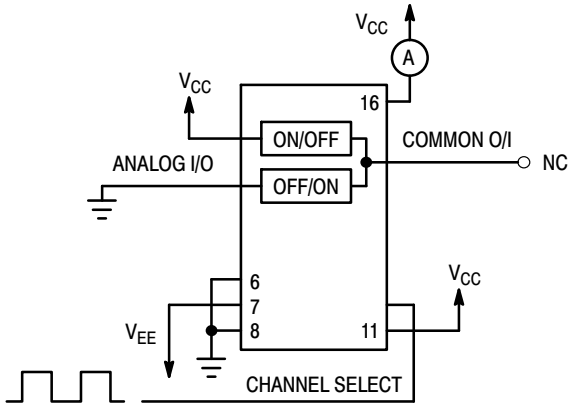

Figure 25. Power Dissipation Capacitance, Test Set−Up

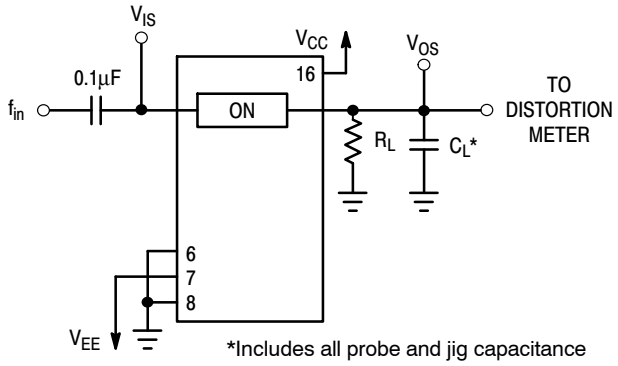

Figure 26. Total Harmonic Distortion, Test Set−Up

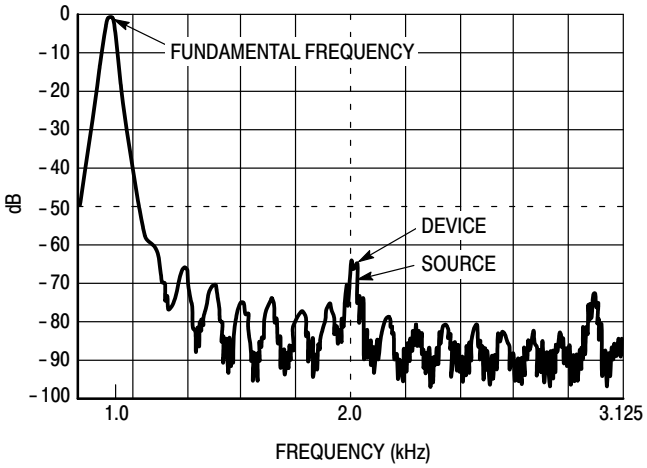

Figure 27. Plot, Harmonic Distortion

APPLICATIONS INFORMATION

The Channel Select and Enable control pins should be at V_{CC} or GND logic levels. V_{CC} being recognized as a logic high and GND being recognized as a logic low. In this example:

$$V_{CC} = +5V = \text{logic high}$$
$$GND = 0V = \text{logic low}$$

The maximum analog voltage swings are determined by the supply voltages V_{CC} and V_{EE}. The positive peak analog voltage should not exceed V_{CC}. Similarly, the negative peak analog voltage should not go below V_{EE}. In this example, the difference between V_{CC} and V_{EE} is ten volts. Therefore, using the configuration of Figure 28, a maximum analog signal of ten volts peak−to−peak can be controlled. Unused analog inputs/outputs may be left floating (i.e., not connected). However, tying unused analog inputs and outputs to V_{CC} or GND through a low value resistor helps minimize crosstalk and feedthrough noise that may be picked up by an unused switch.

Although used here, balanced supplies are not a requirement. The only constraints on the power supplies are that:

$$V_{CC} - GND = 2 \text{ to } 6 \text{ volts}$$
$$V_{EE} - GND = 0 \text{ to } -6 \text{ volts}$$
$$V_{CC} - V_{EE} = 2 \text{ to } 12 \text{ volts}$$
$$\text{and } V_{EE} \leq GND$$

When voltage transients above V_{CC} and/or below V_{EE} are anticipated on the analog channels, external Germanium or Schottky diodes (D_x) are recommended as shown in Figure 29. These diodes should be able to absorb the maximum anticipated current surges during clipping.

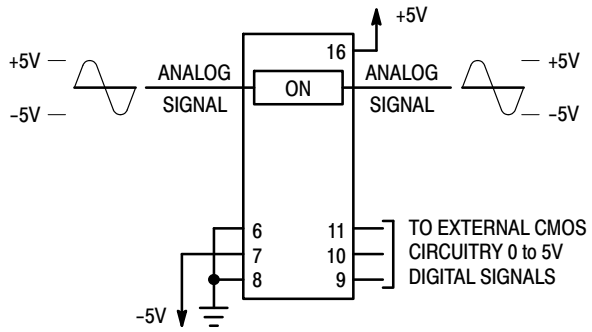

Figure 28. Application Example

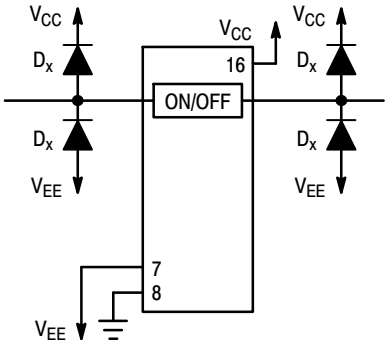

Figure 29. External Germanium or Schottky Clipping Diodes

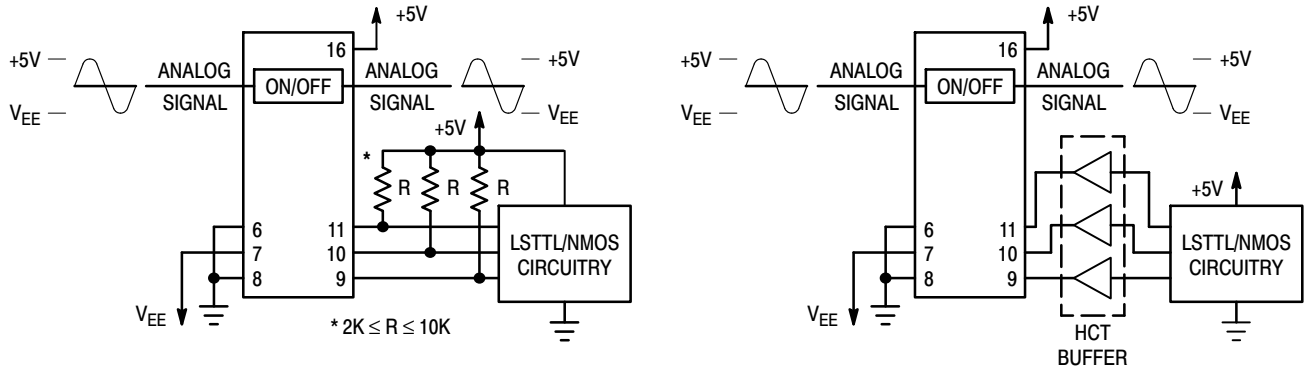

a. Using Pull−Up Resistors **b. Using HCT Interface**

Figure 30. Interfacing LSTTL/NMOS to CMOS Inputs

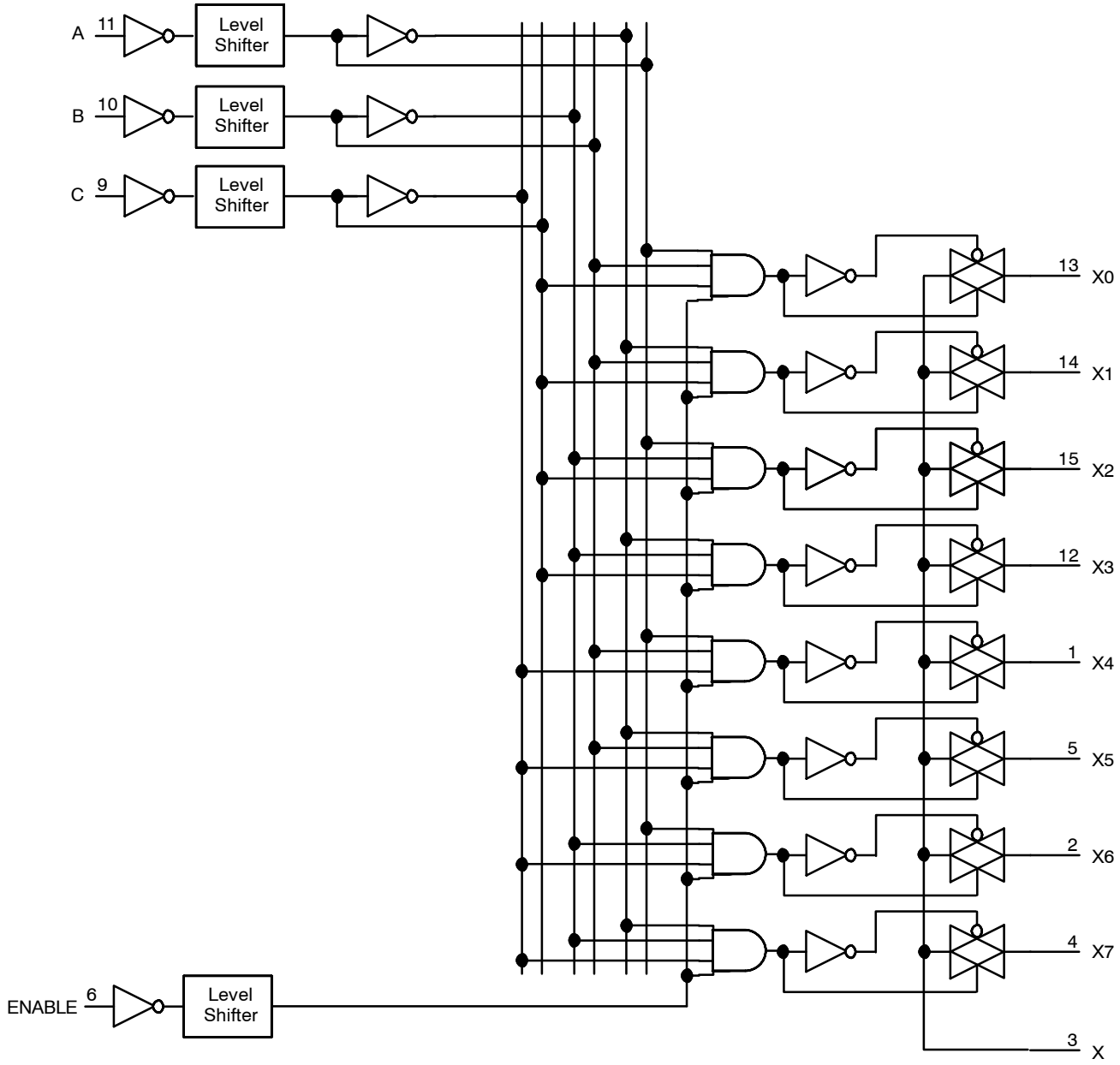

Figure 31. Function Diagram, VHC4051

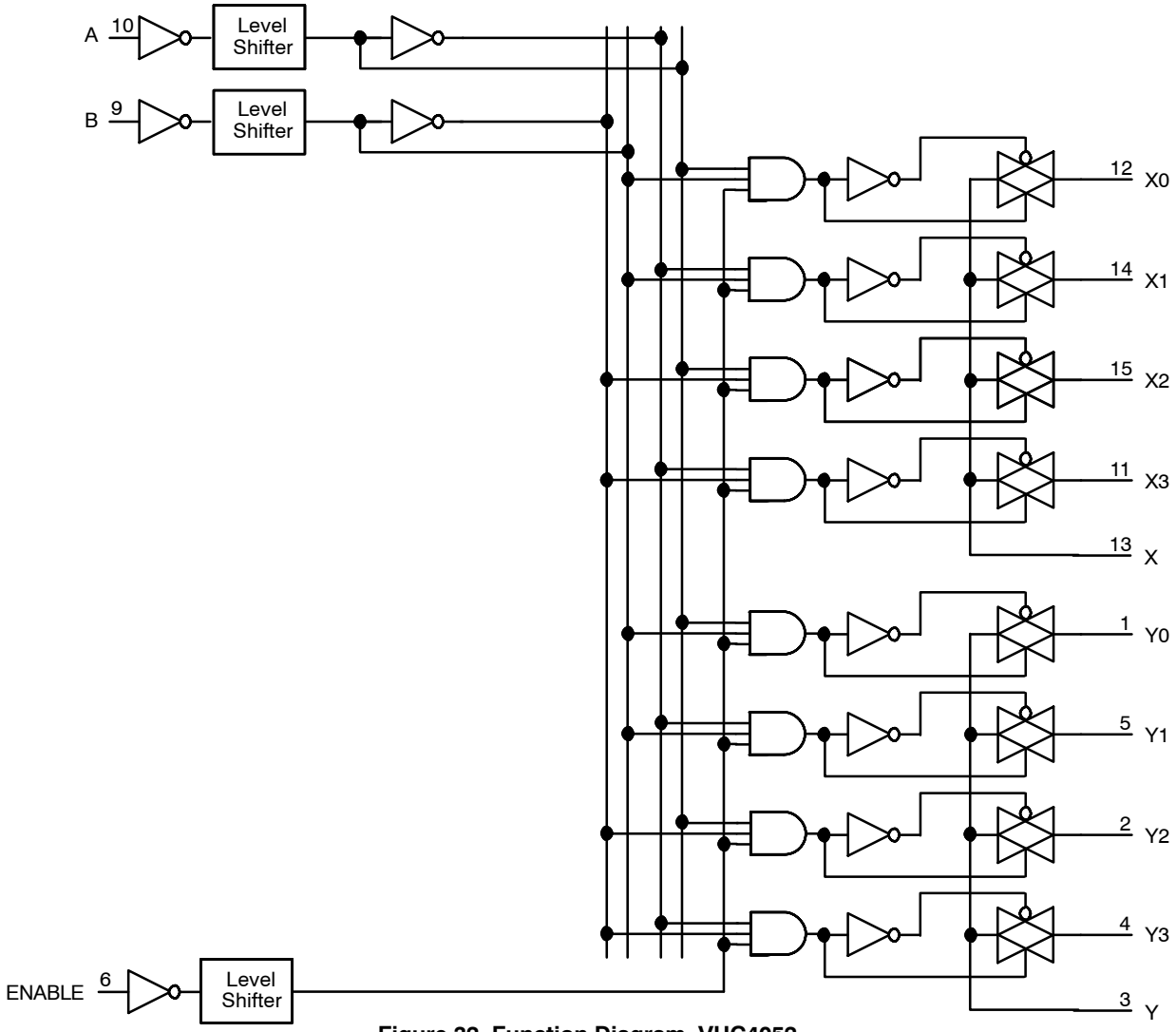

Figure 32. Function Diagram, VHC4052

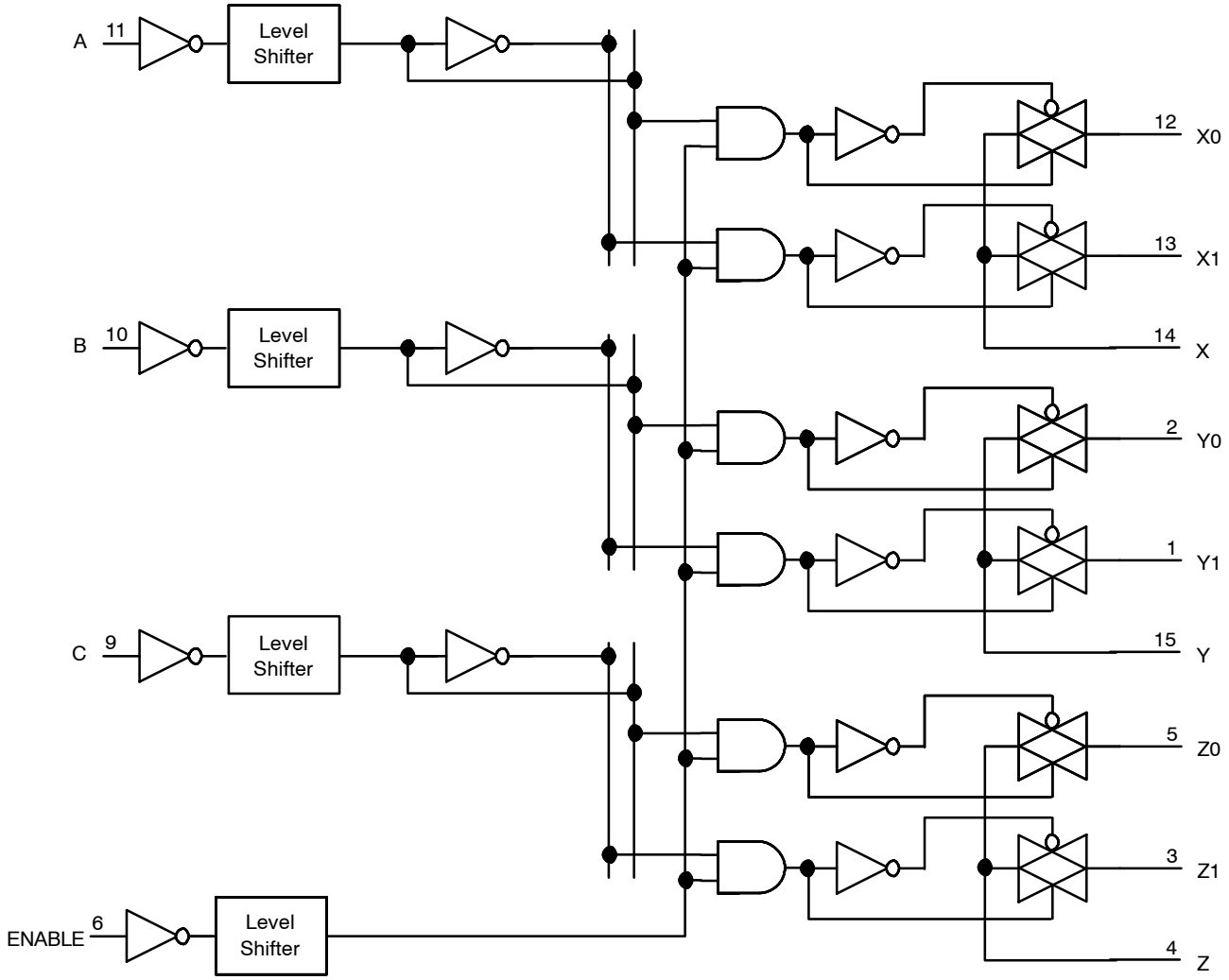

Figure 33. Function Diagram, VHC4053

ORDERING & SHIPPING INFORMATION

Device	Package	Shipping†
MC74VHC4051DR2G	SOIC−16 (Pb−Free)	2500 / Tape & Reel
MC74VHC4052DR2G		
MC74VHC4053DR2G		
MC74VHC4051DTR2G	TSSOP−16 (Pb−Free)	2500 / Tape & Reel
NLVVHC4051DTR2G*		
MC74VHC4052DTR2G		
NLVVHC4052DTR2G*		
MC74VHC4053DTR2G		
NLVVHC4053DTR2G*		

†For information on tape and reel specifications, including part orientation and tape sizes, please refer to our Tape and Reel Packaging Specifications Brochure, BRD8011/D.

*NLV Prefix for Automotive and Other Applications Requiring Unique Site and Control Change Requirements; AEC−Q100 Qualified and PPAP Capable.

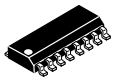

SCALE 1:1

SOIC−16
CASE 751B−05
ISSUE K

DATE 29 DEC 2006

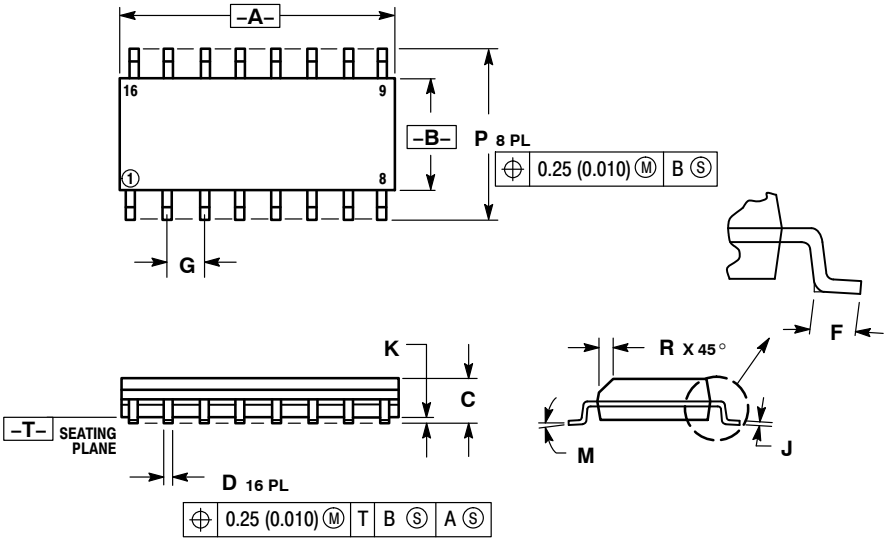

NOTES:
1. DIMENSIONING AND TOLERANCING PER ANSI Y14.5M, 1982.
2. CONTROLLING DIMENSION: MILLIMETER.
3. DIMENSIONS A AND B DO NOT INCLUDE MOLD PROTRUSION.
4. MAXIMUM MOLD PROTRUSION 0.15 (0.006) PER SIDE.
5. DIMENSION D DOES NOT INCLUDE DAMBAR PROTRUSION. ALLOWABLE DAMBAR PROTRUSION SHALL BE 0.127 (0.005) TOTAL IN EXCESS OF THE D DIMENSION AT MAXIMUM MATERIAL CONDITION.

	MILLIMETERS		INCHES	
DIM	MIN	MAX	MIN	MAX
A	9.80	10.00	0.386	0.393
B	3.80	4.00	0.150	0.157
C	1.35	1.75	0.054	0.068
D	0.35	0.49	0.014	0.019
F	0.40	1.25	0.016	0.049
G	1.27 BSC		0.050 BSC	
J	0.19	0.25	0.008	0.009
K	0.10	0.25	0.004	0.009
M	0°	7°	0°	7°
P	5.80	6.20	0.229	0.244
R	0.25	0.50	0.010	0.019

STYLE 1:
PIN 1. COLLECTOR
2. BASE
3. EMITTER
4. NO CONNECTION
5. EMITTER
6. BASE
7. COLLECTOR
8. COLLECTOR
9. BASE
10. EMITTER
11. NO CONNECTION
12. EMITTER
13. BASE
14. COLLECTOR
15. EMITTER
16. COLLECTOR

STYLE 2:
PIN 1. CATHODE
2. ANODE
3. NO CONNECTION
4. CATHODE
5. CATHODE
6. NO CONNECTION
7. ANODE
8. CATHODE
9. CATHODE
10. ANODE
11. NO CONNECTION
12. CATHODE
13. CATHODE
14. NO CONNECTION
15. ANODE
16. CATHODE

STYLE 3:
PIN 1. COLLECTOR, DYE #1
2. BASE, #1
3. EMITTER, #1
4. COLLECTOR, #1
5. COLLECTOR, #2
6. BASE, #2
7. EMITTER, #2
8. COLLECTOR, #2
9. COLLECTOR, #3
10. BASE, #3
11. EMITTER, #3
12. COLLECTOR, #3
13. COLLECTOR, #4
14. BASE, #4
15. EMITTER, #4
16. COLLECTOR, #4

STYLE 4:
PIN 1. COLLECTOR, DYE #1
2. COLLECTOR, #1
3. COLLECTOR, #2
4. COLLECTOR, #2
5. COLLECTOR, #3
6. COLLECTOR, #3
7. COLLECTOR, #4
8. COLLECTOR, #4
9. BASE, #4
10. EMITTER, #4
11. BASE, #3
12. EMITTER, #3
13. BASE, #2
14. EMITTER, #2
15. BASE, #1
16. EMITTER, #1

STYLE 5:
PIN 1. DRAIN, DYE #1
2. DRAIN, #1
3. DRAIN, #2
4. DRAIN, #2
5. DRAIN, #3
6. DRAIN, #3
7. DRAIN, #4
8. DRAIN, #4
9. GATE, #4
10. SOURCE, #4
11. GATE, #3
12. SOURCE, #3
13. GATE, #2
14. SOURCE, #2
15. GATE, #1
16. SOURCE, #1

STYLE 6:
PIN 1. CATHODE
2. CATHODE
3. CATHODE
4. CATHODE
5. CATHODE
6. CATHODE
7. CATHODE
8. CATHODE
9. ANODE
10. ANODE
11. ANODE
12. ANODE
13. ANODE
14. ANODE
15. ANODE
16. ANODE

STYLE 7:
PIN 1. SOURCE N-CH
2. COMMON DRAIN (OUTPUT)
3. COMMON DRAIN (OUTPUT)
4. GATE P-CH
5. COMMON DRAIN (OUTPUT)
6. COMMON DRAIN (OUTPUT)
7. COMMON DRAIN (OUTPUT)
8. SOURCE P-CH
9. SOURCE P-CH
10. COMMON DRAIN (OUTPUT)
11. COMMON DRAIN (OUTPUT)
12. COMMON DRAIN (OUTPUT)
13. GATE N-CH
14. COMMON DRAIN (OUTPUT)
15. COMMON DRAIN (OUTPUT)
16. SOURCE N-CH

RECOMMENDED SOLDERING FOOTPRINT*

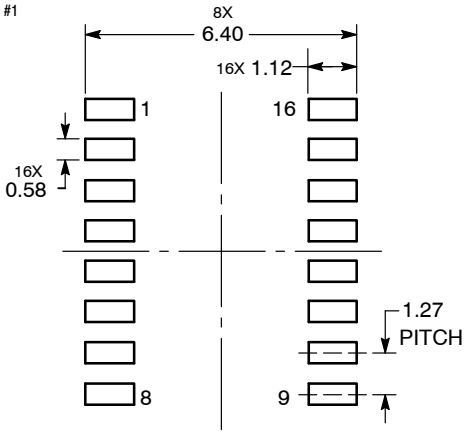

DIMENSIONS: MILLIMETERS

*For additional information on our Pb−Free strategy and soldering details, please download the **onsemi** Soldering and Mounting Techniques Reference Manual, SOLDERRM/D.

DOCUMENT NUMBER:	**98ASB42566B**	Electronic versions are uncontrolled except when accessed directly from the Document Repository. Printed versions are uncontrolled except when stamped "CONTROLLED COPY" in red.
DESCRIPTION:	**SOIC−16**	**PAGE 1 OF 1**

onsemi and onsemi are trademarks of Semiconductor Components Industries, LLC dba **onsemi** or its subsidiaries in the United States and/or other countries. **onsemi** reserves the right to make changes without further notice to any products herein. **onsemi** makes no warranty, representation or guarantee regarding the suitability of its products for any particular purpose, nor does **onsemi** assume any liability arising out of the application or use of any product or circuit, and specifically disclaims any and all liability, including without limitation special, consequential or incidental damages. **onsemi** does not convey any license under its patent rights nor the rights of others.

TSSOP−16 WB
CASE 948F
ISSUE B

DATE 19 OCT 2006

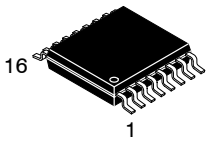

SCALE 2:1

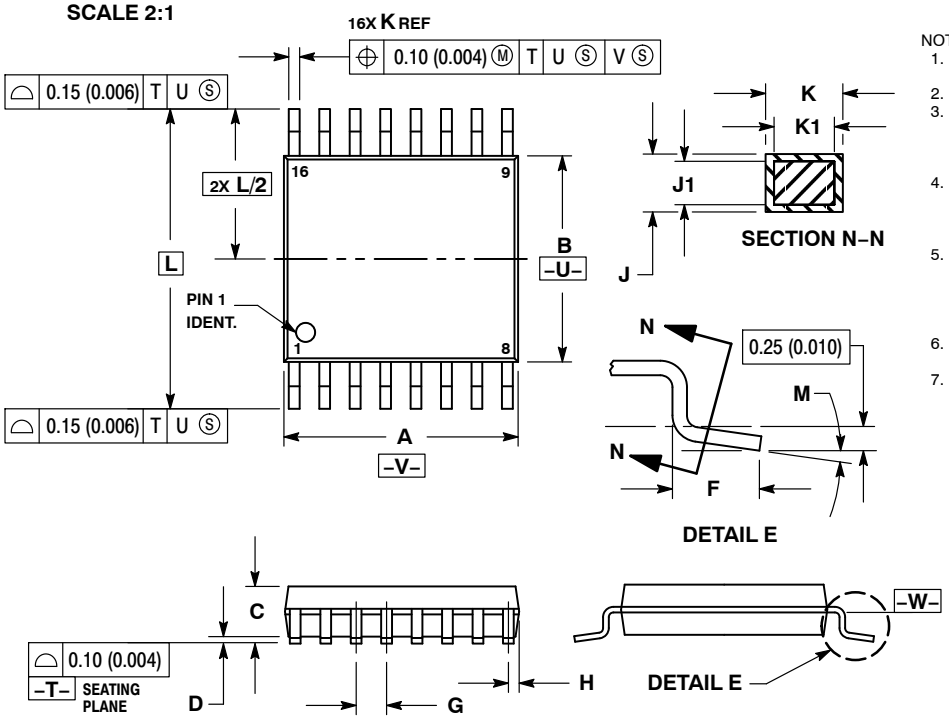

NOTES:
1. DIMENSIONING AND TOLERANCING PER ANSI Y14.5M, 1982.
2. CONTROLLING DIMENSION: MILLIMETER.
3. DIMENSION A DOES NOT INCLUDE MOLD FLASH. PROTRUSIONS OR GATE BURRS. MOLD FLASH OR GATE BURRS SHALL NOT EXCEED 0.15 (0.006) PER SIDE.
4. DIMENSION B DOES NOT INCLUDE INTERLEAD FLASH OR PROTRUSION. INTERLEAD FLASH OR PROTRUSION SHALL NOT EXCEED 0.25 (0.010) PER SIDE.
5. DIMENSION K DOES NOT INCLUDE DAMBAR PROTRUSION. ALLOWABLE DAMBAR PROTRUSION SHALL BE 0.08 (0.003) TOTAL IN EXCESS OF THE K DIMENSION AT MAXIMUM MATERIAL CONDITION.
6. TERMINAL NUMBERS ARE SHOWN FOR REFERENCE ONLY.
7. DIMENSION A AND B ARE TO BE DETERMINED AT DATUM PLANE –W–.

	MILLIMETERS		INCHES	
DIM	MIN	MAX	MIN	MAX
A	4.90	5.10	0.193	0.200
B	4.30	4.50	0.169	0.177
C	–––	1.20	–––	0.047
D	0.05	0.15	0.002	0.006
F	0.50	0.75	0.020	0.030
G	0.65 BSC		0.026 BSC	
H	0.18	0.28	0.007	0.011
J	0.09	0.20	0.004	0.008
J1	0.09	0.16	0.004	0.006
K	0.19	0.30	0.007	0.012
K1	0.19	0.25	0.007	0.010
L	6.40 BSC		0.252 BSC	
M	0 °	8 °	0 °	8 °

RECOMMENDED SOLDERING FOOTPRINT*

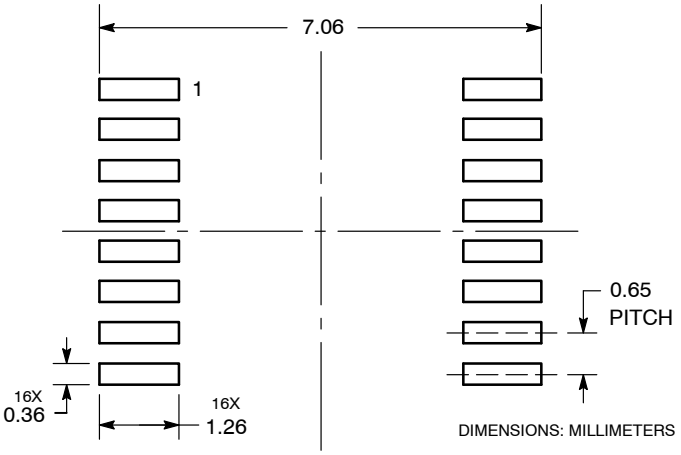

*For additional information on our Pb−Free strategy and soldering details, please download the **onsemi** Soldering and Mounting Techniques Reference Manual, SOLDERRM/D.

GENERIC MARKING DIAGRAM*

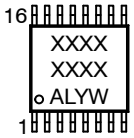

XXXX	= Specific Device Code
A	= Assembly Location
L	= Wafer Lot
Y	= Year
W	= Work Week
G or ▪	= Pb−Free Package

*This information is generic. Please refer to device data sheet for actual part marking. Pb−Free indicator, “G” or microdot “ ▪”, may or may not be present. Some products may not follow the Generic Marking.

DOCUMENT NUMBER:	98ASH70247A	Electronic versions are uncontrolled except when accessed directly from the Document Repository. Printed versions are uncontrolled except when stamped “CONTROLLED COPY” in red.
DESCRIPTION:	TSSOP−16	PAGE 1 OF 1

onsemi and onsemi are trademarks of Semiconductor Components Industries, LLC dba **onsemi** or its subsidiaries in the United States and/or other countries. **onsemi** reserves the right to make changes without further notice to any products herein. **onsemi** makes no warranty, representation or guarantee regarding the suitability of its products for any particular purpose, nor does **onsemi** assume any liability arising out of the application or use of any product or circuit, and specifically disclaims any and all liability, including without limitation special, consequential or incidental damages. **onsemi** does not convey any license under its patent rights nor the rights of others.

onsemi, onsemi, and other names, marks, and brands are registered and/or common law trademarks of Semiconductor Components Industries, LLC dba "**onsemi**" or its affiliates and/or subsidiaries in the United States and/or other countries. **onsemi** owns the rights to a number of patents, trademarks, copyrights, trade secrets, and other intellectual property. A listing of **onsemi**'s product/patent coverage may be accessed at www.onsemi.com/site/pdf/Patent−Marking.pdf. **onsemi** reserves the right to make changes at any time to any products or information herein, without notice. The information herein is provided "as−is" and **onsemi** makes no warranty, representation or guarantee regarding the accuracy of the information, product features, availability, functionality, or suitability of its products for any particular purpose, nor does **onsemi** assume any liability arising out of the application or use of any product or circuit, and specifically disclaims any and all liability, including without limitation special, consequential or incidental damages. Buyer is responsible for its products and applications using **onsemi** products, including compliance with all laws, regulations and safety requirements or standards, regardless of any support or applications information provided by **onsemi**. "Typical" parameters which may be provided in **onsemi** data sheets and/or specifications can and do vary in different applications and actual performance may vary over time. All operating parameters, including "Typicals" must be validated for each customer application by customer's technical experts. **onsemi** does not convey any license under any of its intellectual property rights nor the rights of others. **onsemi** products are not designed, intended, or authorized for use as a critical component in life support systems or any FDA Class 3 medical devices or medical devices with a same or similar classification in a foreign jurisdiction or any devices intended for implantation in the human body. Should Buyer purchase or use **onsemi** products for any such unintended or unauthorized application, Buyer shall indemnify and hold **onsemi** and its officers, employees, subsidiaries, affiliates, and distributors harmless against all claims, costs, damages, and expenses, and reasonable attorney fees arising out of, directly or indirectly, any claim of personal injury or death associated with such unintended or unauthorized use, even if such claim alleges that **onsemi** was negligent regarding the design or manufacture of the part. **onsemi** is an Equal Opportunity/Affirmative Action Employer. This literature is subject to all applicable copyright laws and is not for resale in any manner.

ADDITIONAL INFORMATION

TECHNICAL PUBLICATIONS:
Technical Library: www.onsemi.com/design/resources/technical−documentation
onsemi Website: www.onsemi.com

ONLINE SUPPORT: www.onsemi.com/support
For additional information, please contact your local Sales Representative at
www.onsemi.com/support/sales