ON Semiconductor

Is Now

To learn more about onsemi™, please visit our website at
www.onsemi.com

DN05025/D

MOSFET Pre-driver PWM Considerations

ON Semiconductor®

http://onsemi.com

DESIGN NOTE

Table 1. DEVICE DETAILS

Device	Application	Load Dump	Channel Count	Gate Drive Voltage	Miscellaneous
NCV7513 NCV7517	Automotive MOSFET Pre-driver	40 V MAX	6	5 V Typ.	Fault Diagnosis

Table 2. KEY FEATURES

Compatibility	TTL Input, 3.3/5 V Serial Output
Serial Control	SPI – 16-bit, 4 MHz, Daisy Chain Compatible
Parallel Control	6 PWM Inputs
Shorted Load Detection	External Reference, Selectable Ratio
Open Load Detection	Internal Reference
Short to GND Detection	Internal Reference
Slew Rate Control	Externally Adjustable

Table 3. KEY PARAMETERS

$V_{CC1} = V_{CC2} = 5$ V	NCV7513	NCV7517
Gate Drive Output Current	2.8 mA TYP	14.3 mA TYP
Gate Drive Output Resistance	1800 Ω TYP	350 Ω TYP
Turn-on/off Delay	1.0 μs MAX	
Turn-on Blanking Time	60 μs MAX	31 μs MAX
Turn-off Blanking Time	150 μs MAX	

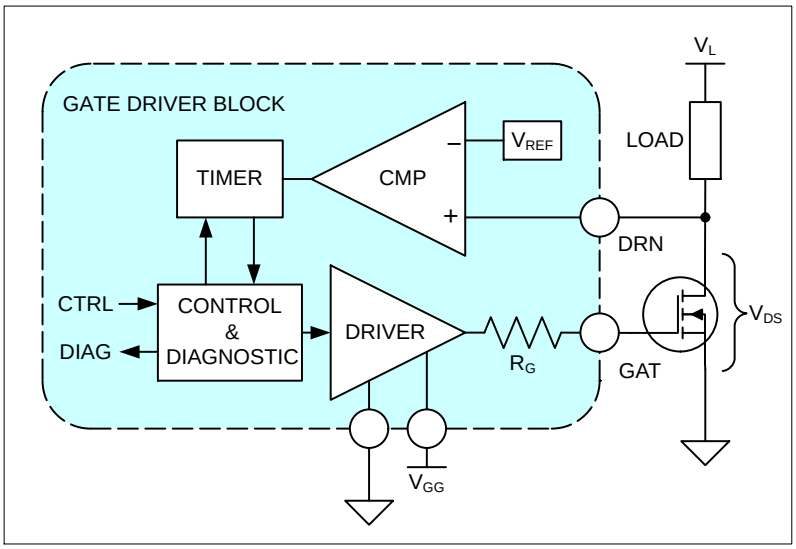

Figure 1. Simplified Pre-driver Block Diagram

Pre-driver Overview

An example of the basic elements of a MOSFET pre-driver providing control, protection, and diagnostic functions is shown in Figure 1. During turn-on, a blanking timer is started while gate charge is delivered from the driver power supply (V_{GG}) to the MOSFET through the driver output resistance (R_G). During this time a comparator (CMP) senses the MOSFET's drain-source voltage (V_{DS}) and compares it against a reference voltage (V_{REF}). If the MOSFET's V_{DS} is greater than V_{REF} at the end of the turn-on blanking time, a possible shorted load has been detected. The MOSFET is then switched off by the pre-driver to protect it and a shorted load diagnostic state is recorded.

During turn-off, a blanking timer is started while the stored gate charge is removed from the MOSFET through R_G to ground. During this time CMP senses the MOSFET's V_{DS} and compares it against a different V_{REF}. If the MOSFET's V_{DS} is less than V_{REF} at the end of the turn-off blanking time, a possible open load or short to ground has been detected. In the short to ground case, load current can continue to flow but a short to ground diagnostic state is recorded.

PWM Considerations

For correct function of the on/off-state diagnostics, the respective blanking timer must be allowed to finish. This requirement places certain boundaries on the allowable PWM frequency and duty cycle. The maximum frequency ($f_{PWM(MAX)}$) is limited by the reciprocal of the sum of the maximum turn-on and turn-off blanking times ($t_{BL(ON,MAX)}$, $t_{BL(OFF,MAX)}$), both of which are derived from the same internal timing reference:

$$f_{PWM(MAX)} \approx \frac{1}{t_{BL(ON,MAX)} + t_{BL(OFF,MAX)}} \qquad \text{(eq. 1)}$$

Using the values given in the "Key Parameters" table, the frequency limit for the NCV7513 is ≈ 4.7 kHz and for the NCV7517 is ≈ 5.5 kHz. PWM frequency in automotive applications is generally not higher than 2 kHz. The minimum and maximum duty cycle ($D_{(MIN,MAX)}$) is then limited by:

$$D_{(MIN)} \approx t_{BL(ON,MAX)} \times f_{PWM} \times 100\%$$
$$D_{(MAX)} \approx t_{BL(OFF,MAX)} \times f_{PWM} \times 100\% \qquad \text{(eq. 2)}$$

The maximum turn-on blank time limits the *minimum* duty cycle for correct turn-on diagnostic operation. For correct turn-off diagnostic operation, the maximum turn-off time limits the *maximum* duty cycle. Minimum duty cycle in the 2 kHz case would be 12% for the NCV7513 and 6.2% for the NCV7517, and maximum duty cycle would be 30% for either product.

PUBLICATION ORDERING INFORMATION

LITERATURE FULFILLMENT:
Literature Distribution Center for ON Semiconductor
P.O. Box 5163, Denver, Colorado 80217 USA
Phone: 303−675−2175 or 800−344−3860 Toll Free USA/Canada
Fax: 303−675−2176 or 800−344−3867 Toll Free USA/Canada
Email: orderlit@onsemi.com

N. American Technical Support: 800−282−9855 Toll Free USA/Canada
Europe, Middle East and Africa Technical Support:
Phone: 421 33 790 2910
Japan Customer Focus Center
Phone: 81−3−5817−1050

ON Semiconductor Website: **www.onsemi.com**

Order Literature: http://www.onsemi.com/orderlit

For additional information, please contact your local Sales Representative