NCV7703CGEVB

NCV7703C Triple Half-Bridge Driver with SPI Control Evaluation Board User's Manual

ON Semiconductor®

www.onsemi.com

EVAL BOARD USER'S MANUAL

Description

The NCV7703C is a triple half-bridge driver for automotive applications targeted for use as a side-view mirror control in an automobile. X−Y mirror control is accomplished by using a common node for the dual motors. Communication to the device is through a SPI bus using the SPI defined communication input pins SI, SO, SCLK, and CSB.

The two on-board motors display the mirror application in action. Circuit setups for short to battery and to ground are provided as well as underload conditions.

Each of the 3 NCV7703C output drivers is designed in a half-bridge configuration for 500 mA with an overcurrent minimum threshold of 1.1 A. Concurrent turn-on of the high-side and low-side devices is not allowed, and attempts are recorded and reported.

Interface to the board is through DIP switches whose positions are displayed on the board LCD display and communicated to the NCV7703C using a microprocessor when the Transmit button is depressed.

Features

- X−Y Motor Mirror Control Display
- Option for External Motor Connections
- SPI Input Switch Control
- Fault Setting and Reporting
- SPI Pin Isolation Capability from Microprocessor

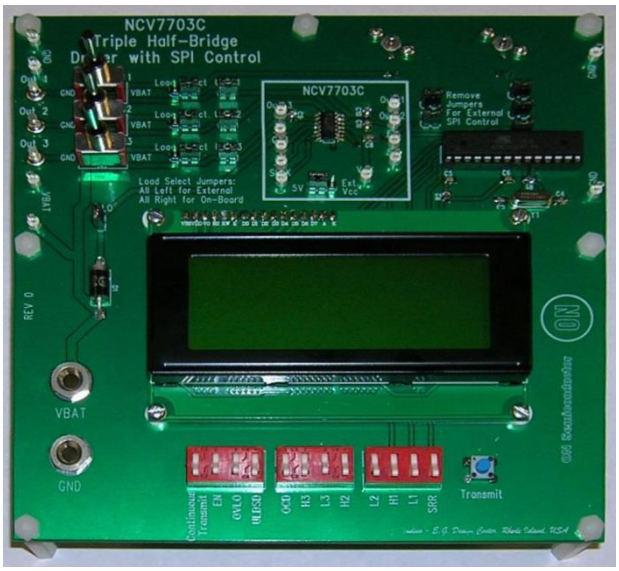

(Top View)

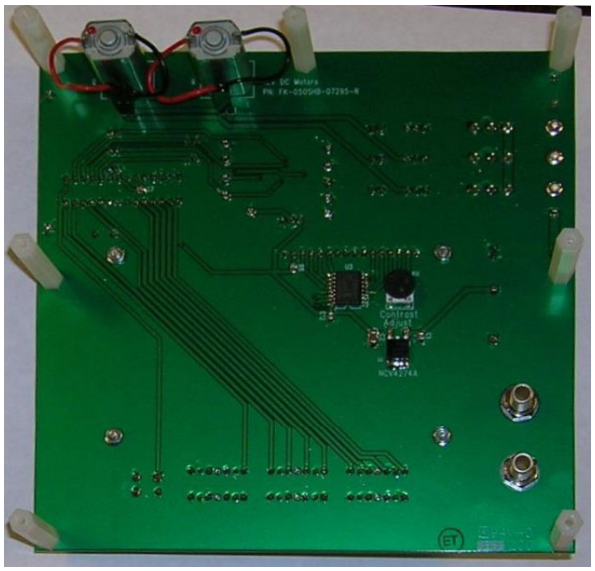

(Bottom View)

Figure 1. NCV7703C Evaluation Board

© Semiconductor Components Industries, LLC, 2016

November, 2016 − Rev. 0

Publication Order Number:
EVBUM2491/D

Application

The NCV7703C provides three output pins set up in a half-bridge configuration. The intended operation is to drive motors by turning on one of the high-side drivers and one of the low-side drivers with a motor load between the two drivers (Figure 2). Using these three half bridges set up in this configuration allows for full-bridge operation of two motors allowing for polarity changes in drive capability for forward and reverse operation.

Primary target load are motors used for automotive side-view mirrors. In a side-view mirror one motor typically drives the mirror on the x-axis while the other mirror typically drives the mirror on the y-axis. The bottom of the eval board (Figure 1) shows the 2 motors in the top left of the photo.

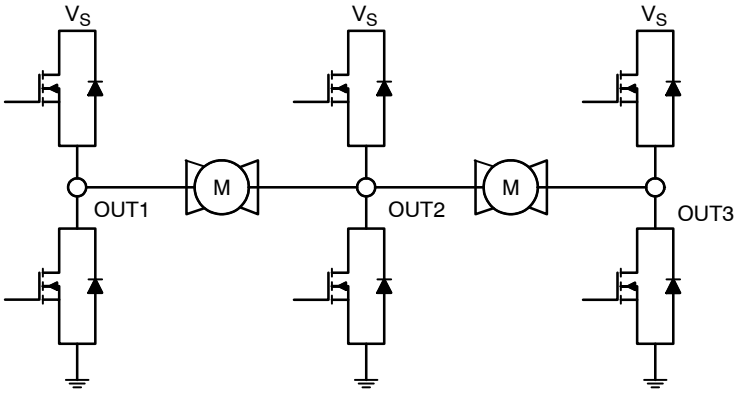

Figure 2. Cascaded Application

Communication

The NCV7703C utilizes SPI (Serial Peripheral Interface) protocol for all communication. SPI uses 4 pins for this communication.

- SI – Serial Input
- SO – Serial Output
- SCLK – Clock
- CSB – Chip Select Bar

Figure 3 shows the format of the 16 bit waveforms used in the NCV7703C.

SPI Operation

Chip select bar goes low indicating data is about to be transferred into the NCV7703C. Data is clocked into the NCV7703C (SI) at the same time the output register information is being clocked out (SO). Each bit of the input waveform corresponds to device control. It's important to note data (on SI) is clocked in on the negative edge of the clock. Data is clocked out (on SO) on the positive edge of the clock. These edges must match if devices are to be used in a daisy chain configuration. See NCV7703C/D for further information.

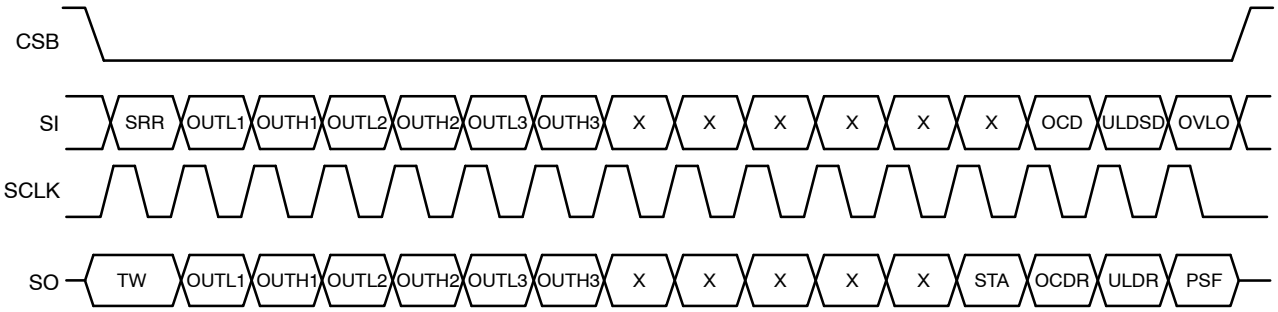

Figure 3. SPI Communication Frame Format

A transcription of input SPI commands is shown in Table 1. Input SPI commands provide Output Drive definition and programmable attribute designation.

Table 1. INPUT SPI COMMANDS

Input Data		
Bit Number	**Bit Description**	**Bit Status**
15	Over Voltage Lock Out Control (OVLO)	0 = Disable
		1 = Enable
14	Under Load Detection Shut Down Control (ULDSD)	0 = Disable
		1 = Enable
13	Over Current Detection Shut Down Control (OCD)	0 = 200 μs
		1 = 25 μs
12	Not Used	
11	Not Used	
10	Not Used	
9	Not Used	
8	Not Used	
7	Not Used	
6	OUTH3	0 = Off
		1 = On
5	OUTL3	0 = Off
		1 = On
4	OUTH2	0 = Off
		1 = On
3	OUTL2	0 = Off
		1 = On
2	OUTH1	0 = Off
		1 = On
1	OUTL1	0 = Off
		1 = On
0	Status Register Reset (SRR)	0 = No Reset
		1 = Reset

A transcription of output SPI data is shown in Table 2. Output SPI data provides output status and fault reporting.

Table 2. OUTPUT SPI COMMANDS

Output Data		
Bit Number	**Bit Description**	**Bit Status**
15	Power Supply Fail Signal (PSF for OVLO or UVLO)	0 = No Fault
		1 = Fault
14	Under Load Detection Reporting Signal (ULDR)	0 = No Fault
		1 = Fault
13	Over Current Detection Reporting Signal (OCDR)	0 = No Fault
		1 = Fault
12	Shoot−Through Attempt (STA)	0 = No Attempt
		1 = Attempt
11	Not Used	
10	Not Used	
9	Not Used	
8	Not Used	
7	Not Used	
6	OUTH3	0 = Off
		1 = On
5	OUTL3	0 = Off
		1 = On
4	OUTH2	0 = Off
		1 = On
3	OUTL2	0 = Off
		1 = On
2	OUTH1	0 = Off
		1 = On
1	OUTL1	0 = Off
		1 = On
0	Thermal Warning (TW)	0 = Not in TW
		1 = In TW

The NCV7703CGEVB is capable of demonstrating.

- Turning Outputs On and Off
- Reporting Underload Detection
- Reporting Overcurrent Detection
- Shoot-through Attempts
- Power Supply Failure (OVLO or UVLO)
- Thermal Warning

The operation of the NCV7703C evaluation board works as a standalone presentation for the customer highlighting H-Bridge operation with motor loads used typically in automotive mirror control systems. Dip switches provide the user programmability for the output control and programmability of overvoltage lockout, underload shut down control, and overcurrent detection shutdown control. Jumpers provide convenient access to external SPI inputs and the external 5 V regulator. Jumpers are also included to direct external loads and fault creation. A toggle switch provides short circuit simulation.

The user must adhere to the absolute maximum ratings when using off-board connections.

Table 3. ABSOLUTE MAXIMUM RATINGS

Rating	Value	Unit
VBAT Supply Voltage to Board (14 VDC) (Using On-board Motors)	−0.3 to 16	V
VBAT Supply Voltage to Board (14 VDC) (Setting Load Jumpers Left for External Motors)	−0.3 to 40	V
OUTx (Setting Load Jumpers Left for External Motors)	−0.3 to 40	V
Logic Pin Voltage EN, SI, SO, SCLK, CSB (Removing Jumpers to Pins)	−0.3 to 5.5	V
VCC (ext.)	−0.3 to 5.5	V
Junction Temperature (NCV7703C)	−40 to 150	°C
Junction Temperature (Evaluation Board)	−40 to 105	°C

Stresses exceeding those listed in the Maximum Ratings table may damage the device. If any of these limits are exceeded, device functionality should not be assumed, damage may occur and reliability may be affected.

Table 4. RECOMMENDED OPERATING CONDITIONS

Parameter	Min	Max	Unit
External Supply Voltage (14 VDC)	–	16	V
Junction Temperature (NCV7703C)	−40	150	°C

Functional operation above the stresses listed in the Recommended Operating Ranges is not implied. Extended exposure to stresses beyond the Recommended Operating Ranges limits may affect device reliability.

Table 5. PIN FUNCTION DESCRIPTION

Connector	Pin Number	Terminal Name	Description
Power	J4	UVLO	Connection to Power Supply input (VS) C1 = 0.1 μF to GND This capacitance may need modification for increased external loads
	GND	GND	Ground
Test Points	J1	ULD	Series connection to OUT1 for underload testing
	J2	ULD	Series connection to OUT2 for underload testing
	J3	ULD	Series connection to OUT3 for underload testing
	J5	5V/Ext. Vcc	Selection jumper for onboard 5 V or off-board 5 V
	J6, J7, J9	Load Select OUT x	Selection jumper for onboard motor load or off-board pin for OUT1, OUT2, and OUT3
	J8	N/A	N/A
	J10−J13	CSB	SPI jumpers CSB, SI, SO, SCLK
	J14	EN	Enable input pin

User Interface Locations

Figure 4 shows all the user interface locations. This lists all the user options available on the evaluation board.

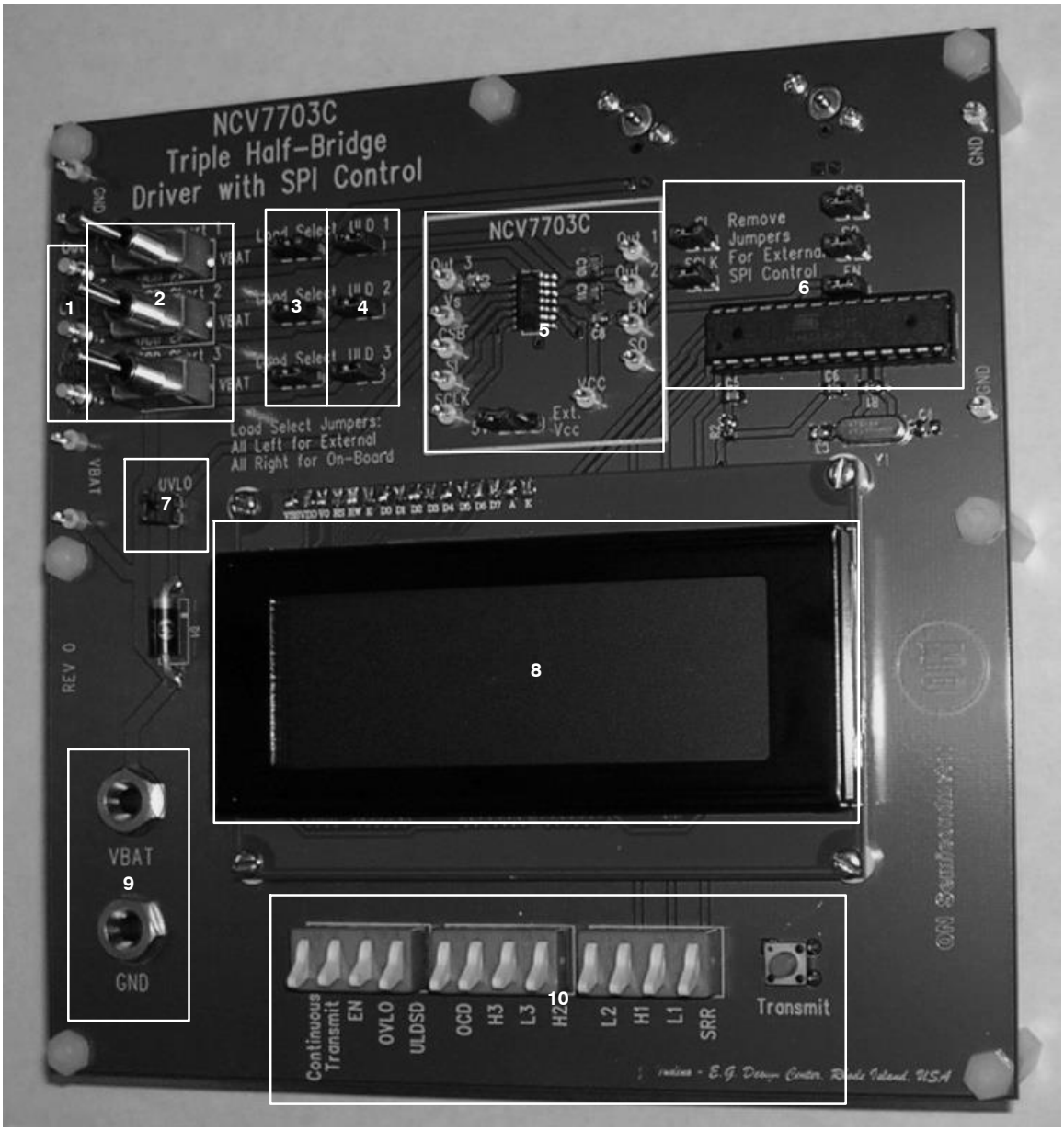

1. OUT1−3 External Post Connections
2. Short Circuit to GND/VBAT toggle switches
3. Load Select Jumpers
4. Underload (ULD1−3) Jumpers
5. NCV7703C with 5V Jumper and posts for EN, SI, SO, SCLK, CSB, VS, OUT1−3, VCC
6. Microprocessor with isolation jumpers for SPI
7. Undervoltage Lockout jumper (UVLO)
8. User interface display
9. 14 V VBAT power supply input
10. SPI input dip switches with transmit button

Figure 4. User Interface Locations

Using the NCV7703C Evaluation Board

Start with all jumpers connected on the board with the Load Select jumpers to the right and the jumper in the NCV7703C box set to the left for on-board 5 V regulation. This will set the board up for use with the onboard motors in normal mode with the on-board 5 V regulator (NCV4274A).

When you 1st turn the power on the eval board, the splash screen will appear.

Figure 5. Display Splash

After 3 seconds the splash screen will disappear and the control screen will appear.

Figure 6. Control Screen

The SI and SO registers will appear at the bottom of the screen.

The top of the screen displays PUOS which indicates bit 15 – bit 12 descriptions for the Output Register for the 4 bits on the output register (SO). They appear directly above the bits in the output register to which they designate.

- Bit 15 – P– Power Supply Fail Signal
- Bit 14 – U – Under Load Detection Reporting
- Bit 13 – O – Over Current Detection
- Bit 12 – S – Shoot-through Attempt

Figure 7. Output Faults

Beneath “PUOS” is “SLCT” which indicates “select” for 332211Th of the input register (SI). Above 332211Th are the polarity identifiers for each output bit and the Thermal Warning bit (TW indicated as Th). When not enabled, a “D” will be displayed for “disable” at the top left of the screen.

Figure 8. Output Selection

Programming the SPI Commands

The NCV7703C SPI commands are all encoded using the dip switches at the bottom of the board. A low is designated by the dip switch down while a high is designated by the dip switch high. The user is given access to all 10 NCV7703C SPI input bits directly (6 of the 16 SPI input bits are unused).

Two modes of sending signals are provided.

1. Transmit.
   a. This allows you to set the dip switches prior to sending the command. Simply set the switches and press the Transmit button.
2. Continuous Transmit.
   a. This allows a repitition of commands as dictated by the dip switches. This allows the user to see an immediate response on the display screen.

NOTE: All commands for any activation of the NCV7703C eval board will require EN to be high. The EN (enable) pin is controlled by the microprocessor.

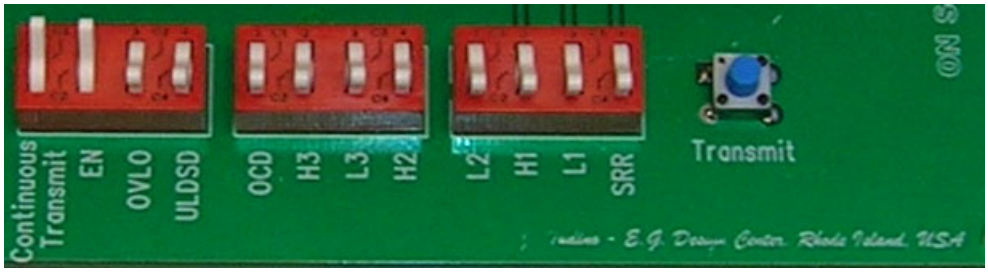

Figure 9. SPI Programming

Turning Output Drivers ON

Each of the three outputs can operate individually in either high-side or low-side mode. To demonstrate H-Bridge operation, the user should connect one terminal of the load device to one of the NCV7703C's outputs and the other terminal to a different output.

Example of Operation on the Eval Board

Referencing the motor schematic shown in Figure 2, turning on the 1st motor,

1. Set the EN dip switch high.
2. Set the H1 dip switch high.
3. Set the L2 dip switch high.
4. Press the transmit switch.

Multiple combinations of half-bridge drivers will turn the two motors on in different directions.

Braking the motors is recommended for system design (i.e. bringing the motors to a stop before changing direction) although it is unlikely any damage will occur on the eval board if accidently exercised without braking.

External SPI and Logic Control

Normal communication to the NCV7703C is provided by the on-board microprocessor shown in Figure 10. To communicate with an external device, remove the SI, SCLK, CSB, SO, and EN jumpers and connect the communication to the posts shown in Figure 11.

Figure 10.

Logic Power Supply Input

The NCV7703C is powered by a 5 V regulator to pin 11 (V_{CC}). The evaluation board supplies 5 V from an on-board 5 V regulator IC (NCV4274A) located under the board powered through VBAT. Figure 11 shows the jumper to use the on-board regulator. To use an external regulator, move the jumper to the right, and connect your external regulator to the V_{CC} post.

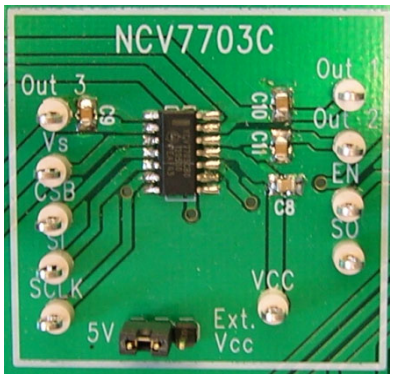

Figure 11.

Creating Faults On-Board

Faults can be created on the board using the setup shown in Figure 12. Additionally, the output loads can be directed off-board here using the Load Select Jumpers. The Load Select Jumpers to the right as shown in Figure 12 utilize the two motor loads of the board. Move the jumpers to the left to use the posts Out 1, Out 2, and Out 3 on the left of Figure 12.

Underload

Remove the ULD x jumpers while OUTx is turned on to remove the load connected to the output. With ULDSD set high, the output will latch off. With ULDSD set low, the output will not latch off.

Overcurrent

Use the toggle switch to create a setup for short to GND (left) for high-side mode or short to VBAT (right) for low-side mode while the output is turned on.

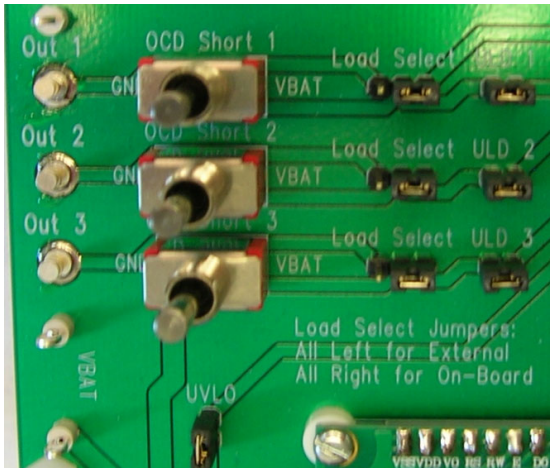

Figure 12. Fault Creating

Other Faults

Shoot-Through Attempt

Attempting to turn on a channel high-side driver and low-side driver at the same time will be sensed by the NCV7703C and not allowed to happen. This will be reported in bit number 12 of the output register.

Power Supply Failure

V_S power supply faults are reported on bit 15 of the output register. An undervoltage condition can be simulated by removing the UVLO jumper. Overvoltage conditions are reported directly from the VBAT input voltage. Overvoltage conditions are not allowed on this eval board using the on-board motors. External loads should be used during overvoltage testing of the NCV7703C.

Thermal Warning

IC Thermal Warning is provided on Bit 0 of the output register should the IC temperature reach 140°C (typ).

Loads

The Load Select jumpers shown in Figure 12 direct the outputs (OUTx) to the on-board motors (jumper to the right) or to the posts (jumper to the left) shown on the left of Figure 12.

Status Register Reset (SRR)

The Status Register Reset bit is Bit 0 in the input register.

- The PSF (Power Supply Fail Bit) fault is reset with SRR.
- The STA (Shoot-Through Attempt Bit) fault is reset with SRR.
- An OCD (overcurrent event) requires SRR=1 to turn a driver back on and clear the error bit.
- A ULD (underload) fault is reset with SRR.
- A TW (thermal warning) fault is reset with SRR after the IC cools below its' TW threshold.
- Proceeding Thermal Shutdown, SRR is required with a turn-on command for operation.

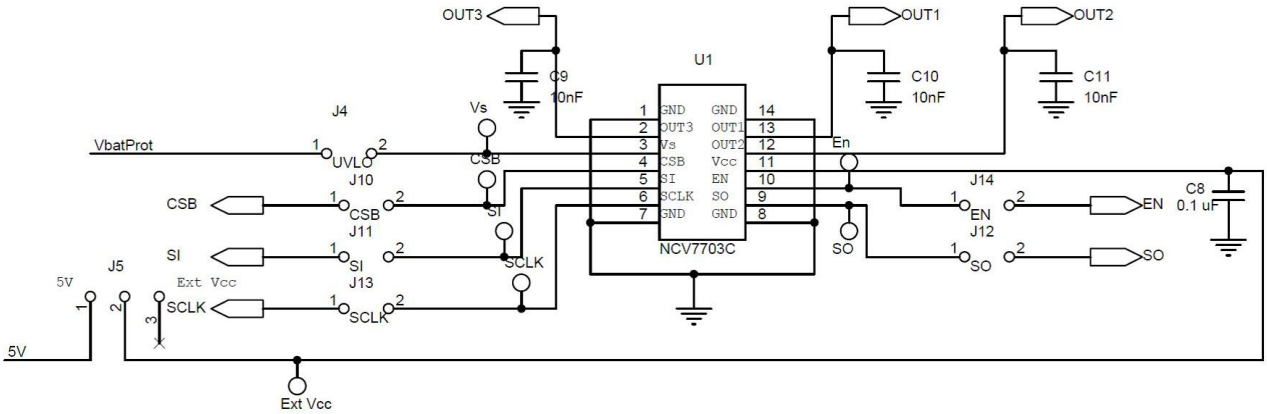

Figure 13. NCV7703C Evaluation Board Schematic – Integrated Circuit

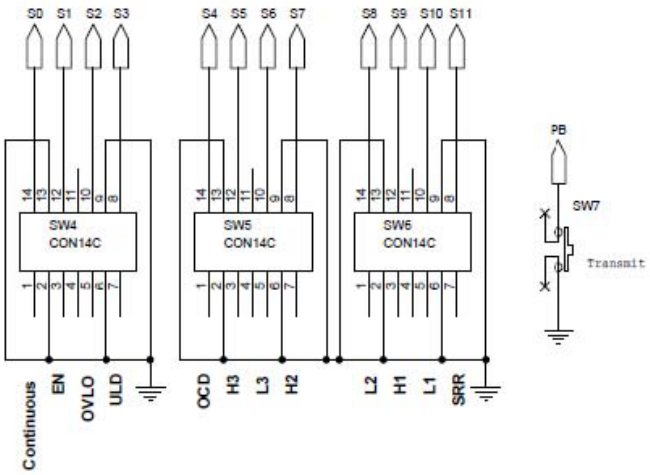

Figure 14. NCV7703C Evaluation Board Schematic – SPI DIP Switch Interface

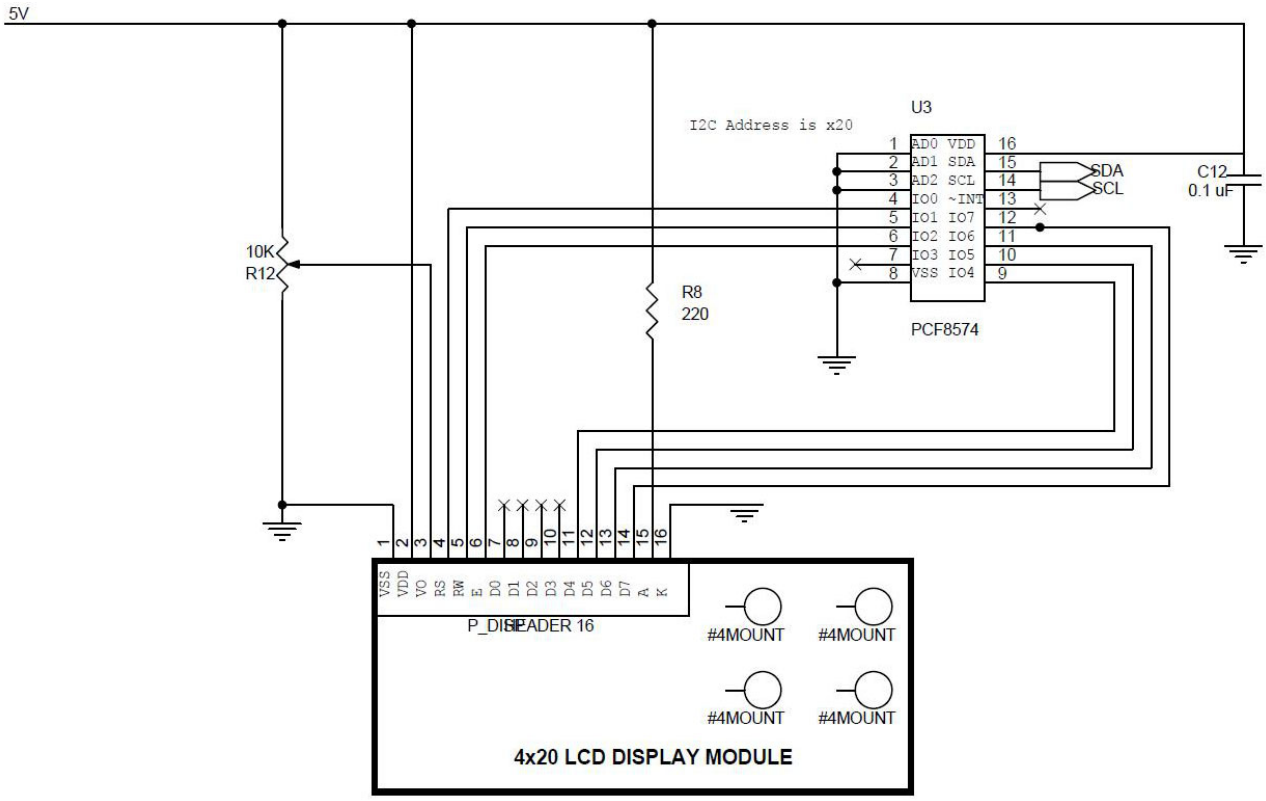

Figure 15. NCV7703C Evaluation Board Schematic – User Display

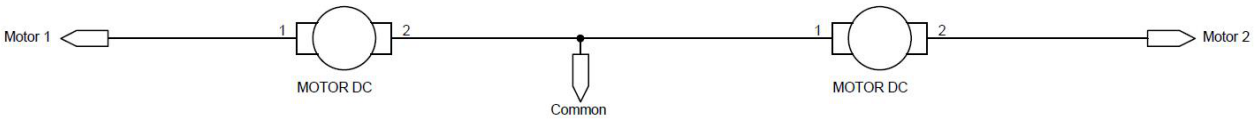

Figure 16. NCV7703C Evaluation Board Schematic – Motor Loads

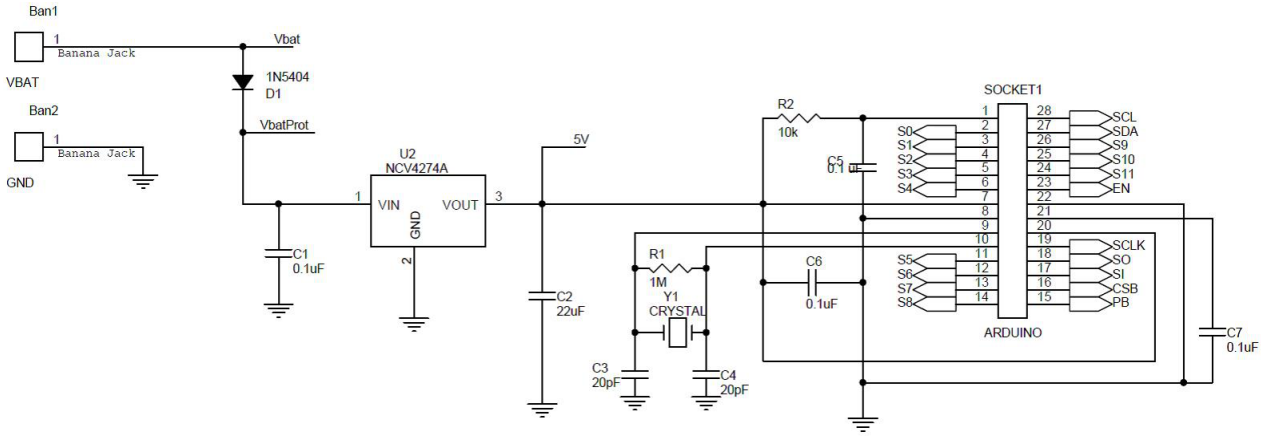

Figure 17. NCV7703C Evaluation Board Schematic – 5 V Regulator and Microprocessor

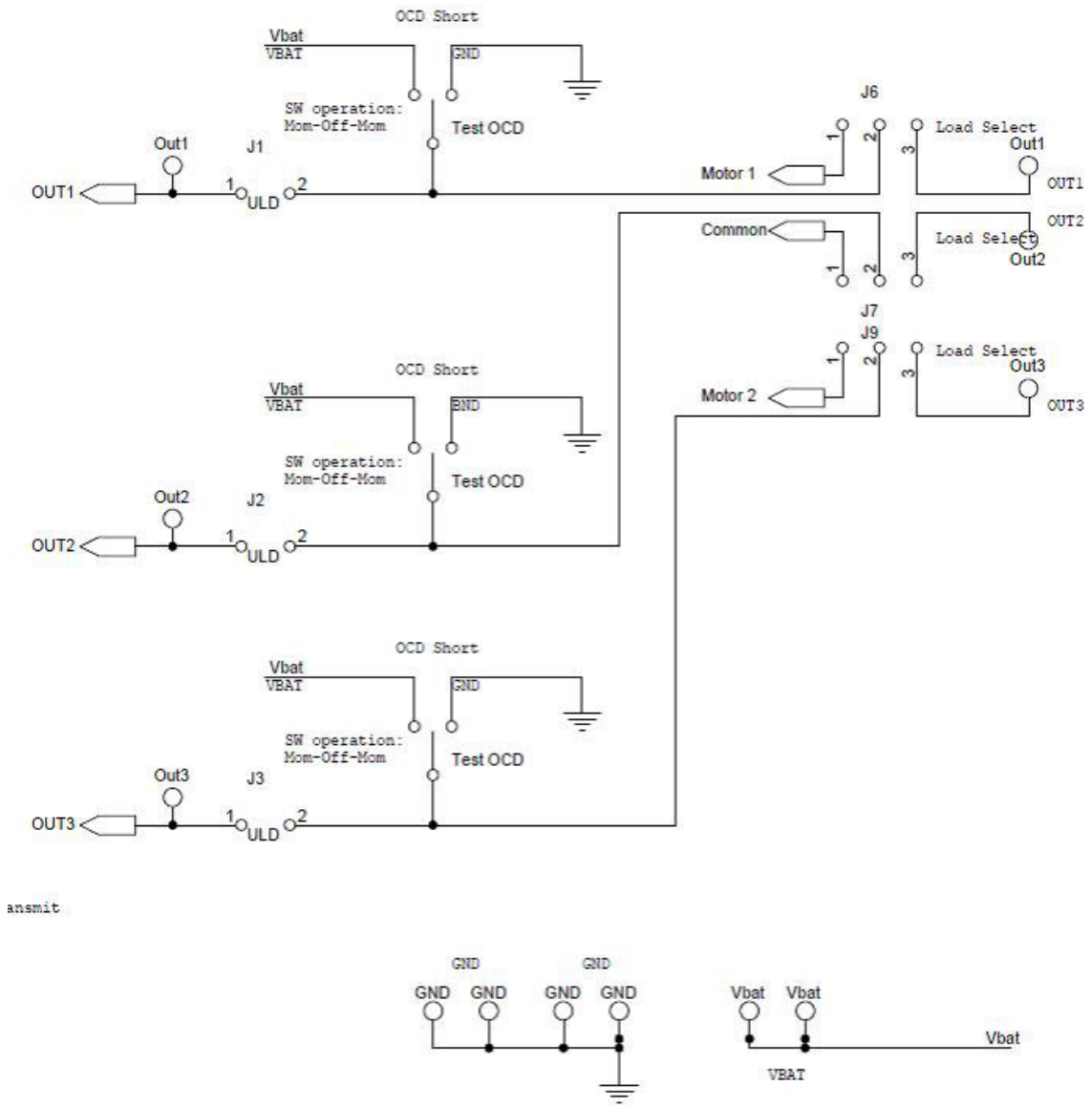

Figure 18. NCV7703C Evaluation Board Schematic – Output Faults and Load Select

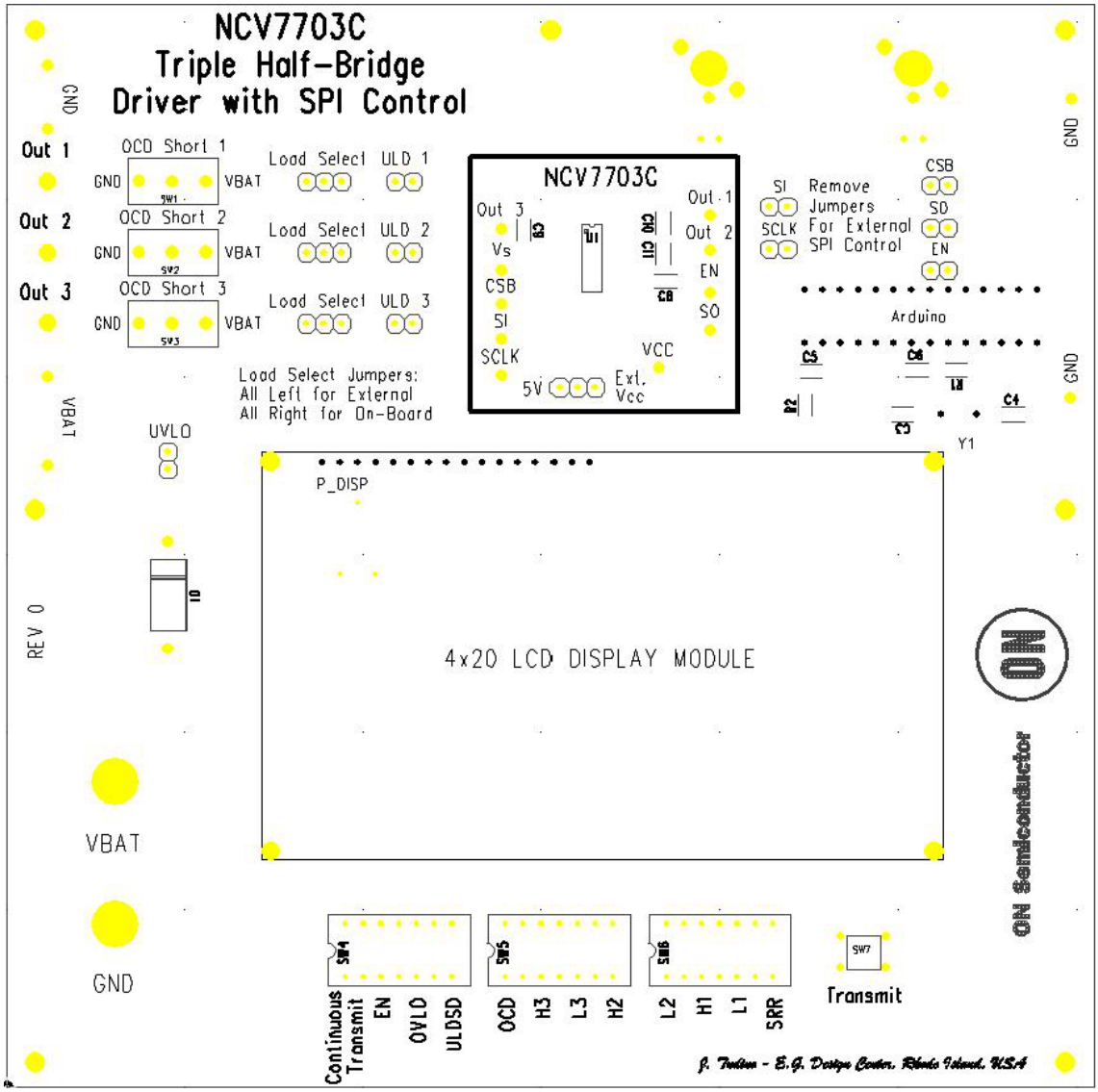

Figure 19. Printed Circuit Board

Bill of Materials

Table 6. NCV7703C EVALUATION BOARD BILL OF MATERIALS

Designator	Qty.	Description	Value	Tolerance	Footprint	Manufacturer	Manufacturer Part Number	Substitution Allowed
VBAT	1	Banana Jack	–	–	BANANA	CINCH CONNECTIVITY SOLUTIONS	108–0740–001	Yes
GND	1	Banana Jack	–	–	BANANA	CINCH CONNECTIVITY SOLUTIONS	108–0740–001	Yes
C3, C4	2	Oscillator Load Capacitors	20 pF	5%	0805	KEMET	C0805C200J5GACTU	Yes
C1, C6, C7, C5, C8, C12	6	Bypass Capacitors	0.1 μF	10%	0805	KEMET	C0805C104K5RACTU	Yes
C2	1	5 V Regulator Output Capacitor	22 μF	20%	1206	KEMET	C1206C226M4PAC7800	Yes
C9, C10, C11	3	Output Capacitors	0.01 μF	10%	0805	KEMET	C0805C103K5RACTU	Yes
D1	1	Reverse Battery Diode	3 A, 400 V	–	1N540X	ON Semiconductor	1N5404RLG	Yes
J1–J4, J10–J14	9	Jumper Posts 100 mil, 2 Post	–	–	JMP	3M	961102–6404–AR	Yes
J5, J6, J7, J9	4	Jumper Posts 100 mil, 3 Post	–	–	JP3	3M	961103–6404–AR	Yes
N/A	13	Jumper Shunts 100 mil Spacing	–	–	N/A	SULLINS CONNECTOR SOLUTIONS	QPC02SXGN–RC	Yes
R1	1	Oscillator Bias Resistor	1 MΩ	1%	0805	VISHAY DALE	CRCW08051M00FKEA	Yes
R2	1	Pull-Up Resistor	10 kΩ	1%	0805	VISHAY DALE	CRCW080510K0FKEA	Yes
R8	1	LCD Backlight Resistor	220 Ω	1%	0805	VISHAY DALE	CRCW0805220RFKEA	Yes
R12	1	Thumbwheel Potentiometer	10 kΩ	20%	3352E_POT	BOURNS INC	3352E–1–103LF	Yes
SW1, SW2, SW3	3	SPDT Mom-Off-Mom	–	–	MINITOGGLE_LARGE	E–SWITCH	100SP4T1B1M2QEH	Yes
SW4, SW5, SW6	3	Programming DIP Switches	–	–	DIP14	GRAYHILL	76STC04T	No
SW7	1	Transmit Pushbutton	–	–	SW_6x6_TACTILE	TE CCONNECTIVITY ALCOSWITCH	1–1825910–0	Yes
TURRET 1, 2, 3	3	Off-Board Load Turrets	–	–	TURRET	MIL–MAX	2501–2–00–44–00–00–07–0	Yes
TP1–TP16	16	Test Points	–	–	TP	KEYSTONE ELECTRONICS	5012	Yes
U1	1	NCV7703C Triple Half-Bridge	–	–	SOIC14_N	ON Semiconductor	NCV7703CD2G	No
U2	1	NCV4274A 5 V Regulator	–	–	DPAK3_SMD	ON Semiconductor	NCV4274ADT50RKG	Yes
U3	1	PCF8574T I/O Expander	–	–	SOIC16_W	NXP SEMICONDUCTOR	PCF8574T	No
Y1	1	16 MHz Microprocessor Crystal	20 pF	30 ppm	XTAL	CTS–FREQUENCY CONTROLS	ATS16A	Yes
Arduino	1	Arduino-Based SPI Conroller	–	–	N/A	ATMEL	ATMEGA328P–PU	No
SOCKET1	1	28 Pin DIP Socket for Arduino	–	–	DIP28	ON SHORE TECHNOLOGY INC	ED281DT	Yes

Table 6. NCV7703C EVALUATION BOARD BILL OF MATERIALS (continued)

Designator	Qty.	Description	Value	Tolerance	Footprint	Manufacturer	Manufacturer Part Number	Substitution Allowed
LCD	1	20 x 4 LCD Module	–	–	N/A	COFUFU	LCM TM204A	Yes
P_DISP	1	16 Pin Header for LCD Module	–	–	SIP–16P	SULLINS CONNECTOR SOLUTIONS	PRPC016SAAN–RC	Yes
MG1, MG2	2	12 V DC Motor	–	–	FK–050SHB–07295–R	NICHIBO TAIWAN	FK–050SHB–07295–R	No

onsemi, onsemi, and other names, marks, and brands are registered and/or common law trademarks of Semiconductor Components Industries, LLC dba "**onsemi**" or its affiliates and/or subsidiaries in the United States and/or other countries. **onsemi** owns the rights to a number of patents, trademarks, copyrights, trade secrets, and other intellectual property. A listing of **onsemi**'s product/patent coverage may be accessed at www.onsemi.com/site/pdf/Patent−Marking.pdf. **onsemi** is an Equal Opportunity/Affirmative Action Employer. This literature is subject to all applicable copyright laws and is not for resale in any manner.

The evaluation board/kit (research and development board/kit) (hereinafter the "board") is not a finished product and is not available for sale to consumers. The board is only intended for research, development, demonstration and evaluation purposes and will only be used in laboratory/development areas by persons with an engineering/technical training and familiar with the risks associated with handling electrical/mechanical components, systems and subsystems. This person assumes full responsibility/liability for proper and safe handling. Any other use, resale or redistribution for any other purpose is strictly prohibited.

THE BOARD IS PROVIDED BY ONSEMI TO YOU "AS IS" AND WITHOUT ANY REPRESENTATIONS OR WARRANTIES WHATSOEVER. WITHOUT LIMITING THE FOREGOING, ONSEMI (AND ITS LICENSORS/SUPPLIERS) HEREBY DISCLAIMS ANY AND ALL REPRESENTATIONS AND WARRANTIES IN RELATION TO THE BOARD, ANY MODIFICATIONS, OR THIS AGREEMENT, WHETHER EXPRESS, IMPLIED, STATUTORY OR OTHERWISE, INCLUDING WITHOUT LIMITATION ANY AND ALL REPRESENTATIONS AND WARRANTIES OF MERCHANTABILITY, FITNESS FOR A PARTICULAR PURPOSE, TITLE, NON−INFRINGEMENT, AND THOSE ARISING FROM A COURSE OF DEALING, TRADE USAGE, TRADE CUSTOM OR TRADE PRACTICE.

onsemi reserves the right to make changes without further notice to any board.

You are responsible for determining whether the board will be suitable for your intended use or application or will achieve your intended results. Prior to using or distributing any systems that have been evaluated, designed or tested using the board, you agree to test and validate your design to confirm the functionality for your application. Any technical, applications or design information or advice, quality characterization, reliability data or other services provided by **onsemi** shall not constitute any representation or warranty by **onsemi**, and no additional obligations or liabilities shall arise from **onsemi** having provided such information or services.

onsemi products including the boards are not designed, intended, or authorized for use in life support systems, or any FDA Class 3 medical devices or medical devices with a similar or equivalent classification in a foreign jurisdiction, or any devices intended for implantation in the human body. You agree to indemnify, defend and hold harmless **onsemi**, its directors, officers, employees, representatives, agents, subsidiaries, affiliates, distributors, and assigns, against any and all liabilities, losses, costs, damages, judgments, and expenses, arising out of any claim, demand, investigation, lawsuit, regulatory action or cause of action arising out of or associated with any unauthorized use, even if such claim alleges that **onsemi** was negligent regarding the design or manufacture of any products and/or the board.

This evaluation board/kit does not fall within the scope of the European Union directives regarding electromagnetic compatibility, restricted substances (RoHS), recycling (WEEE), FCC, CE or UL, and may not meet the technical requirements of these or other related directives.

FCC WARNING − This evaluation board/kit is intended for use for engineering development, demonstration, or evaluation purposes only and is not considered by **onsemi** to be a finished end product fit for general consumer use. It may generate, use, or radiate radio frequency energy and has not been tested for compliance with the limits of computing devices pursuant to part 15 of FCC rules, which are designed to provide reasonable protection against radio frequency interference. Operation of this equipment may cause interference with radio communications, in which case the user shall be responsible, at its expense, to take whatever measures may be required to correct this interference.

onsemi does not convey any license under its patent rights nor the rights of others.

LIMITATIONS OF LIABILITY: **onsemi** shall not be liable for any special, consequential, incidental, indirect or punitive damages, including, but not limited to the costs of requalification, delay, loss of profits or goodwill, arising out of or in connection with the board, even if **onsemi** is advised of the possibility of such damages. In no event shall **onsemi**'s aggregate liability from any obligation arising out of or in connection with the board, under any theory of liability, exceed the purchase price paid for the board, if any.

The board is provided to you subject to the license and other terms per **onsemi**'s standard terms and conditions of sale. For more information and documentation, please visit www.onsemi.com.

ADDITIONAL INFORMATION

TECHNICAL PUBLICATIONS:
Technical Library: www.onsemi.com/design/resources/technical−documentation
onsemi Website: www.onsemi.com

ONLINE SUPPORT: www.onsemi.com/support
For additional information, please contact your local Sales Representative at www.onsemi.com/support/sales