FAIRCHILD™

Is Now Part of

ON Semiconductor®

To learn more about ON Semiconductor, please visit our website at
www.onsemi.com

Please note: As part of the Fairchild Semiconductor integration, some of the Fairchild orderable part numbers will need to change in order to meet ON Semiconductor's system requirements. Since the ON Semiconductor product management systems do not have the ability to manage part nomenclature that utilizes an underscore (_), the underscore (_) in the Fairchild part numbers will be changed to a dash (-). This document may contain device numbers with an underscore (_). Please check the ON Semiconductor website to verify the updated device numbers. The most current and up-to-date ordering information can be found at www.onsemi.com. Please email any questions regarding the system integration to Fairchild_questions@onsemi.com.

ON Semiconductor and the ON Semiconductor logo are trademarks of Semiconductor Components Industries, LLC dba ON Semiconductor or its subsidiaries in the United States and/or other countries. ON Semiconductor owns the rights to a number of patents, trademarks, copyrights, trade secrets, and other intellectual property. A listing of ON Semiconductor's product/patent coverage may be accessed at www.onsemi.com/site/pdf/Patent-Marking.pdf. ON Semiconductor reserves the right to make changes without further notice to any products herein. ON Semiconductor makes no warranty, representation or guarantee regarding the suitability of its products for any particular purpose, nor does ON Semiconductor assume any liability arising out of the application or use of any product or circuit, and specifically disclaims any and all liability, including without limitation special, consequential or incidental damages. Buyer is responsible for its products and applications using ON Semiconductor products, including compliance with all laws, regulations and safety requirements or standards, regardless of any support or applications information provided by ON Semiconductor. "Typical" parameters which may be provided in ON Semiconductor data sheets and/or specifications can and do vary in different applications and actual performance may vary over time. All operating parameters, including "Typicals" must be validated for each customer application by customer's technical experts. ON Semiconductor does not convey any license under its patent rights nor the rights of others. ON Semiconductor products are not designed, intended, or authorized for use as a critical component in life support systems or any FDA Class 3 medical devices or medical devices with a same or similar classification in a foreign jurisdiction or any devices intended for implantation in the human body. Should Buyer purchase or use ON Semiconductor products for any such unintended or unauthorized application, Buyer shall indemnify and hold ON Semiconductor and its officers, employees, subsidiaries, affiliates, and distributors harmless against all claims, costs, damages, and expenses, and reasonable attorney fees arising out of, directly or indirectly, any claim of personal injury or death associated with such unintended or unauthorized use, even if such claim alleges that ON Semiconductor was negligent regarding the design or manufacture of the part. ON Semiconductor is an Equal Opportunity/Affirmative Action Employer. This literature is subject to all applicable copyright laws and is not for resale in any manner.

FAIRCHILD SEMICONDUCTOR®

May 2010

FSFR-US Series — Fairchild Power Switch (FPS™) for Half-Bridge Resonant Converters

Features

- Variable Frequency Control with 50% Duty Cycle for Half-Bridge Resonant Converter Topology
- High Efficiency through Zero Voltage Switching (ZVS)
- Internal UniFET™s with Fast-Recovery Type Body Diode
- Fixed Dead Time (350ns) Optimized for MOSFETs
- Up to 300kHz Operating Frequency
- Auto-Restart Operation for All Protections with An External LV_{CC}
- Protection Functions: Over-Voltage Protection (OVP), Over-Current Protection (OCP), Abnormal Over-Current Protection (AOCP), Internal Thermal Shutdown (TSD)

Applications

- PDP and LCD TVs
- Desktop PCs and Servers
- Adapters
- Telecom Power Supplies

Description

The FSFR-US series are a highly integrated power switches designed for high-efficiency half-bridge resonant converters. Offering everything necessary to build a reliable and robust resonant converter, the FSFR-US series simplifies designs and improves productivity, while improving performance. The FSFR-US series combines power MOSFETs with fast-recovery type body diodes, a high-side gate-drive circuit, an accurate current controlled oscillator, frequency limit circuit, soft-start, and built-in protection functions. The high-side gate-drive circuit has a common-mode noise cancellation capability, which guarantees stable operation with excellent noise immunity. The fast-recovery body diode of the MOSFETs improves reliability against abnormal operation conditions, while minimizing the effect of the reverse recovery. Using the zero-voltage-switching (ZVS) technique dramatically reduces the switching losses and efficiency is significantly improved. The ZVS also reduces the switching noise noticeably, which allows a small-sized Electromagnetic Interference (EMI) filter.

The FSFR-US series can be applied to various resonant converter topologies such as series resonant, parallel resonant, and LLC resonant converters.

Related Resources

AN4151 — Half-bridge LLC Resonant Converter Design using FSFR-Series Fairchild Power Switch (FPS™)

Ordering Information

Part Number	Package	Operating Junction Temperature	$R_{DS(ON_MAX)}$	Maximum Output Power without Heatsink (V_{IN}=350~400V) (1,2)	Maximum Output Power with Heatsink (V_{IN}=350~400V) (1,2)
FSFR2100US	9-SIP	-40 to +130°C	0.51Ω	180W	400W
FSFR1800US			0.95Ω	120W	260W
FSFR1700US			1.25Ω	100W	200W
FSFR2100USL	9-SIP L-Forming		0.51Ω	180W	400W
FSFR1800USL			0.95Ω	120W	260W
FSFR1700USL			1.25Ω	100W	200W

Notes:
1. The junction temperature can limit the maximum output power.
2. Maximum practical continuous power in an open-frame design at 50°C ambient.

© 2009 Fairchild Semiconductor Corporation

Application Circuit Diagram

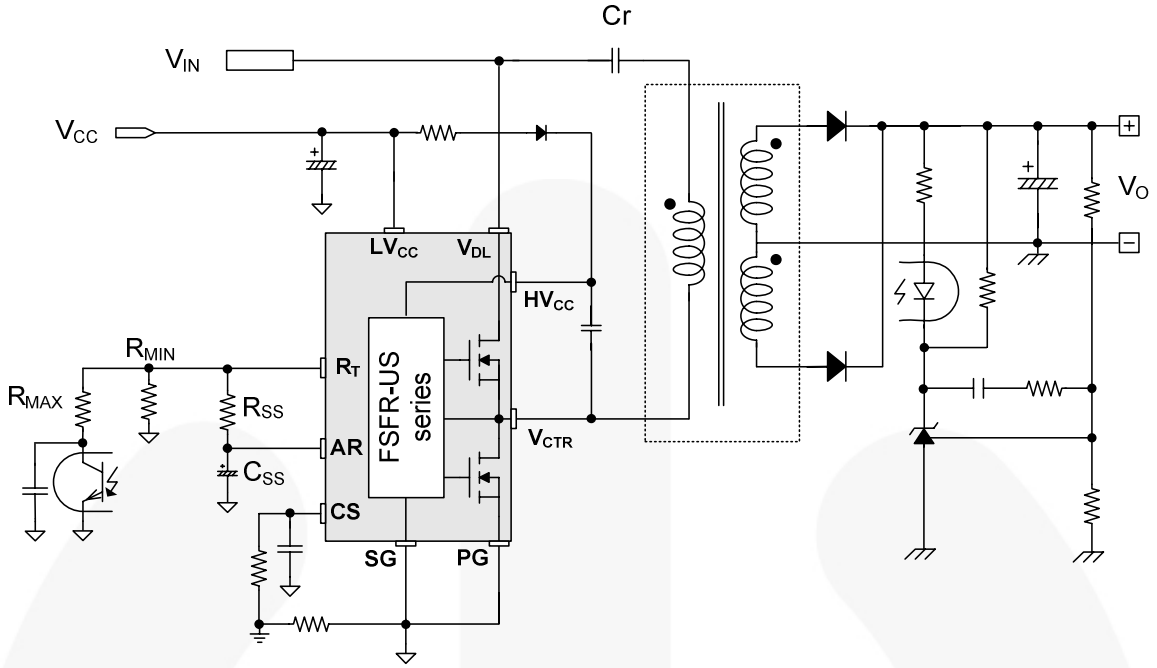

Figure 1. Typical Application Circuit (LLC Resonant Half-Bridge Converter)

Block Diagram

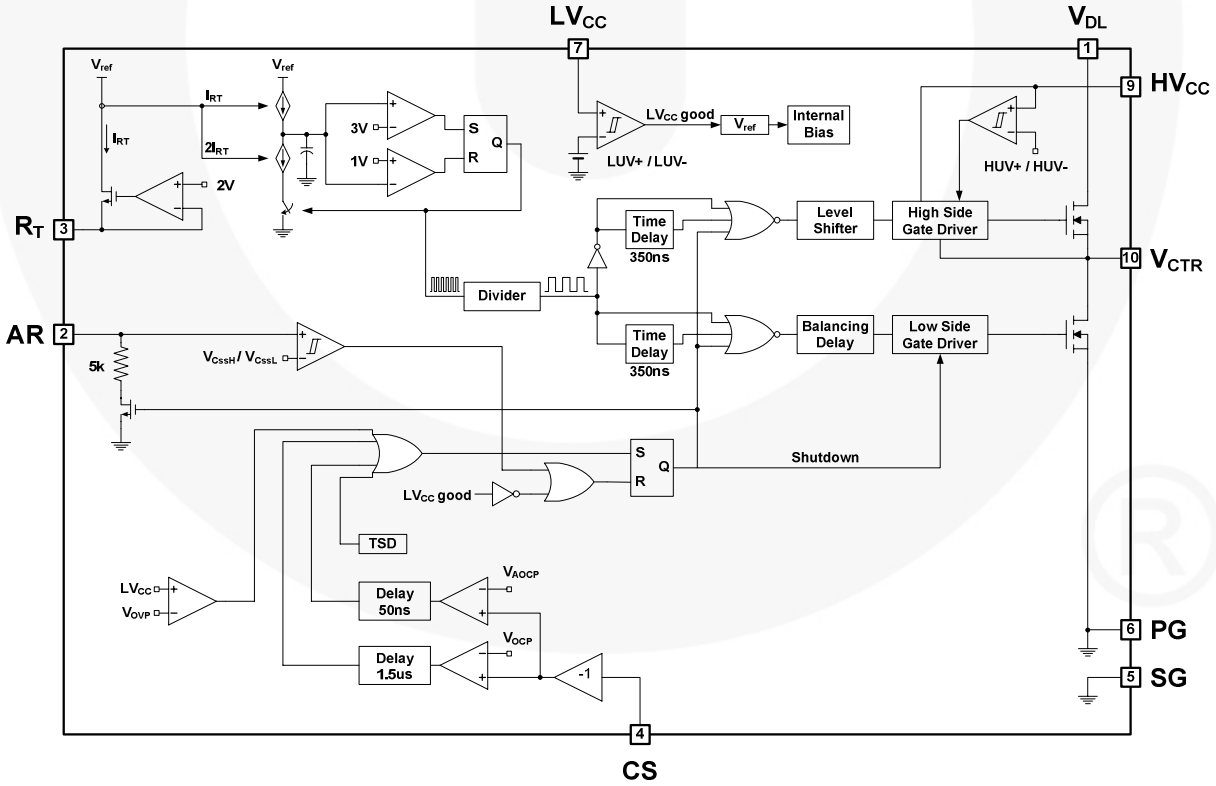

Figure 2. Internal Block Diagram

Pin Configuration

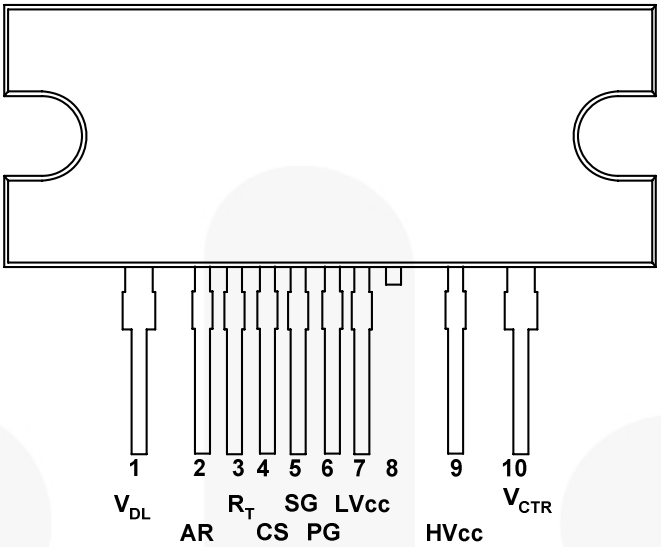

Figure 3. Package Diagram

Pin Definitions

Pin #	Name	Description
1	V_{DL}	This is the drain of the high-side MOSFET, typically connected to the input DC link voltage.
2	AR	This pin is for discharging the external soft-start capacitor when any protections are triggered. When the voltage of this pin drops to 0.2, all protections are reset and the controller starts to operate again.
3	R_T	This pin programs the switching frequency. Typically, an opto-coupler is connected to control the switching frequency for the output voltage regulation.
4	CS	This pin senses the current flowing through the low-side MOSFET. Typically, negative voltage is applied on this pin.
5	SG	This pin is the control ground.
6	PG	This pin is the power ground. This pin is connected to the source of the low-side MOSFET.
7	LV_{CC}	This pin is the supply voltage of the control IC.
8	NC	No connection.
9	HV_{CC}	This is the supply voltage of the high-side gate-drive circuit IC.
10	V_{CTR}	This is the drain of the low-side MOSFET. Typically, a transformer is connected to this pin.

Absolute Maximum Ratings

Stresses exceeding the absolute maximum ratings may damage the device. The device may not function or be operable above the recommended operating conditions and stressing the parts to these levels is not recommended. In addition, extended exposure to stresses above the recommended operating conditions may affect device reliability. The absolute maximum ratings are stress ratings only. T_A=25°C unless otherwise specified.

Symbol	Parameter		Min.	Max.	Unit
V_{DS}	Maximum Drain-to-Source Voltage (V_{DL}-V_{CTR} and V_{CTR}-PG)		500		V
LV_{CC}	Low-Side Supply Voltage		-0.3	25.0	V
HV_{CC} to V_{CTR}	High-Side V_{CC} Pin to Low-Side Drain Voltage		-0.3	25.0	V
HV_{CC}	High-Side Floating Supply Voltage		-0.3	525.0	V
V_{AR}	Auto-Restart Pin Input Voltage		-0.3	LV_{CC}	V
V_{CS}	Current Sense (CS) Pin Input Voltage		-5.0	1.0	V
V_{RT}	R_T Pin Input Voltage		-0.3	5.0	V
dV_{CTR}/dt	Allowable Low-Side MOSFET Drain Voltage Slew Rate			50	V/ns
P_D	Total Power Dissipation(3)	FSFR2100US/L		12.0	W
		FSFR1800US/L		11.7	
		FSFR1700US/L		11.6	
T_J	Maximum Junction Temperature(4)			+150	°C
	Recommended Operating Junction Temperature(4)		-40	+130	
T_{STG}	Storage Temperature Range		-55	+150	°C

Notes:
3. Per MOSFET when both MOSFETs are conducting.
4. The maximum value of the recommended operating junction temperature is limited by thermal shutdown.

Absolute Maximum Ratings (Continued)

Symbol	Parameter			Min.	Max.	Unit
MOSFET Section						
V_{DGR}	Drain Gate Voltage (R_{GS}=1MΩ)			500		V
V_{GS}	Gate Source (GND) Voltage				±30	V
I_{DM}	Drain Current Pulsed[5]	FSFR2100US/L			32	A
		FSFR1800US/L			23	
		FSFR1700US/L			20	
I_D	Continuous Drain Current	FSFR2100US/L	T_C=25°C		10.5	A
			T_C=100°C		6.5	
		FSFR1800US/L	T_C=25°C		7.0	
			T_C=100°C		4.5	
		FSFR1700US/L	T_C=25°C		6.0	
			T_C=100°C		3.9	
Package Section						
Torque	Recommended Screw Torque			5~7		kgf·cm

Notes:
5. Pulse width is limited by maximum junction temperature.

Thermal Impedance

T_A=25°C unless otherwise specified.

Symbol	Parameter		Value	Unit
θ_{JC}	Junction-to-Case Center Thermal Impedance (Both MOSFETs Conducting)	FSFR2100US/L	10.44	ºC/W
		FSFR1800US/L	10.68	
		FSFR1700US/L	10.79	

Electrical Characteristics

T_A=25°C unless otherwise specified.

Symbol	Parameter		Test Conditions	Specifications			Unit
				Min.	Typ.	Max.	
MOSFET Section							
BV_{DSS}	Drain-to-Source Breakdown Voltage		I_D=200μA, T_A=25°C	500			V
			I_D=200μA, T_A=125°C		540		
$R_{DS(ON)}$	On-State Resistance	FSFR2100US/L	V_{GS}=10V, I_D=6.0A		0.41	0.51	Ω
		FSFR1800US/L	V_{GS}=10V, I_D=3.0A		0.77	0.95	
		FSFR1700US/L	V_{GS}=10V, I_D=2.0A		1.00	1.25	
t_{rr}	Body Diode Reverse Recovery Time(6)	FSFR2100US/L	V_{GS}=0V, I_{Diode}=12.0A, dI_{Diode}/dt=100A/μs		120		ns
		FSFR1800US/L	V_{GS}=0V, I_{Diode}=7.0A, dI_{Diode}/dt=100A/μs		160		
		FSFR1700US/L	V_{GS}=0V, I_{Diode}=6.0A, dI_{Diode}/dt=100A/μs		160		
Supply Section							
I_{LK}	Offset Supply Leakage Current		H-V_{CC}=V_{CTR}=500V			50	μA
I_QHV_{CC}	Quiescent HV_{CC} Supply Current		(HV_{CC}UV+) - 0.1V		50	120	μA
I_QLV_{CC}	Quiescent LV_{CC} Supply Current		(LV_{CC}UV+) - 0.1V		100	200	μA
I_OHV_{CC}	Operating HV_{CC} Supply Current (RMS Value)		f_{OSC}=100KHz		6	9	mA
			No Switching		100	200	μA
I_OLV_{CC}	Operating LV_{CC} Supply Current (RMS Value)		f_{OSC}=100KHz		7	11	mA
			No Switching		2	4	mA
UVLO Section							
LV_{CC}UV+	LV_{CC} Supply Under-Voltage Positive Going Threshold (LV_{CC} Start)			11.2	12.5	13.8	V
LV_{CC}UV-	LV_{CC} Supply Under-Voltage Negative Going Threshold (LV_{CC} Stop)			8.90	10.0	11.1	V
LV_{CC}UVH	LV_{CC} Supply Under-Voltage Hysteresis				2.50		V
HV_{CC}UV+	HV_{CC} Supply Under-Voltage Positive Going Threshold (HV_{CC} Start)			8.2	9.2	10.2	V
HV_{CC}UV-	HV_{CC} Supply Under-Voltage Negative Going Threshold (HV_{CC} Stop)			7.8	8.7	9.6	V
HV_{CC}UVH	HV_{CC} Supply Under-Voltage Hysteresis				0.5		V

Electrical Characteristics (Continued)

T_A=25°C unless otherwise specified.

Symbol	Parameter	Test Conditions	Specifications			Unit
			Min	Typ	Max	
Oscillator & Feedback Section						
V_{RT}	V-I Converter Threshold Voltage	R_T=5.2KΩ	1.5	2.0	2.5	V
f_{OSC}	Output Oscillation Frequency		94	100	106	KHz
DC	Output Duty Cycle		48	50	52	%
f_{SS}	Internal Soft-Start Initial Frequency	f_{SS}=f_{OSC}+40kHz, R_T=5.2KΩ		140		KHz
t_{SS}	Internal Soft-Start Time		2	3	4	ms
Protection Section						
V_{CssH}	Beginning Voltage to Discharge C_{SS}		0.9	1.0	1.1	V
V_{CssL}	Beginning Voltage to Charge C_{SS} and Restart		0.16	0.20	0.24	V
V_{OVP}	LV_{CC} Over-Voltage Protection	L-V_{CC} > 21V	21	23	25	V
V_{AOCP}	AOCP Threshold Voltage	ΔV/Δt=-0.1V/μs	-1.0	-0.9	-0.8	V
t_{BAO}	AOCP Blanking Time(6)	V_{CS} < V_{AOCP}; ΔV/Δt=-0.1V/μs		50		ns
V_{OCP}	OCP Threshold Voltage	V/Δt=-1V/μs	-0.64	-0.58	-0.52	V
t_{BO}	OCP Blanking Time(6)	V_{CS} < V_{OCP}; ΔV/Δt=-1V/μs	1.0	1.5	2.0	μs
t_{DA}	Delay Time (Low Side) Detecting from V_{AOCP} to Switch Off(6)	ΔV/Δt=-1V/μs		250	400	ns
T_{SD}	Thermal Shutdown Temperature(6)		120	135	150	°C
Dead-Time Control Section						
D_T	Dead Time(7)			350		ns

Notes:
6. This parameter, although guaranteed, is not tested in production.
7. These parameters, although guaranteed, are tested only in EDS (wafer test) process.

Typical Performance Characteristics

These characteristic graphs are normalized at T_A=25ºC.

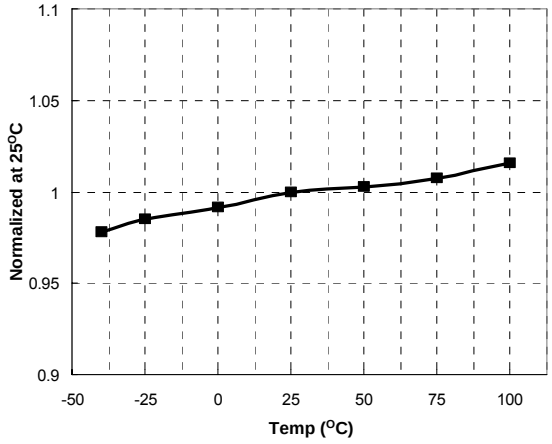

Figure 4. Low-Side MOSFET Duty Cycle vs. Temperature

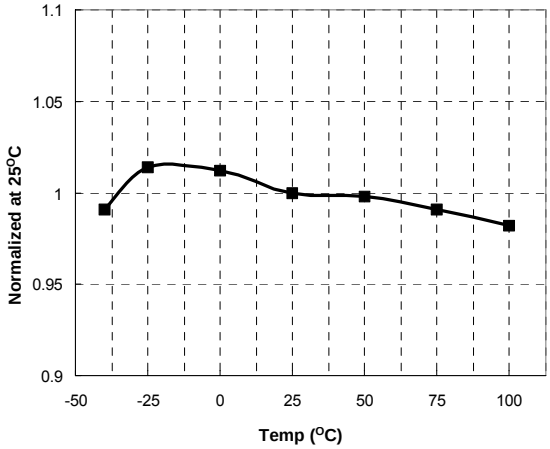

Figure 5. Switching Frequency vs. Temperature

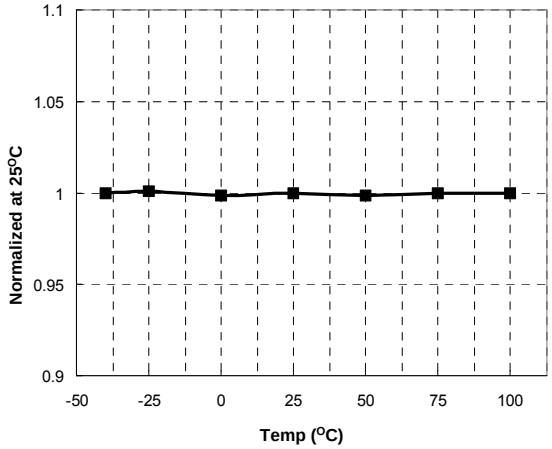

Figure 6. High-Side V_{CC} (HV_{CC}) Start vs. Temperature

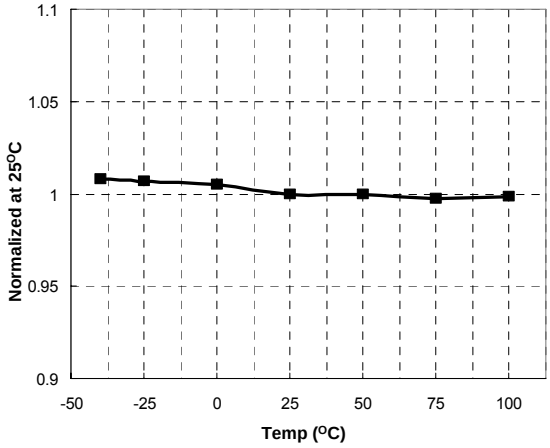

Figure 7. High-Side V_{CC} (HV_{CC}) Stop vs. Temperature

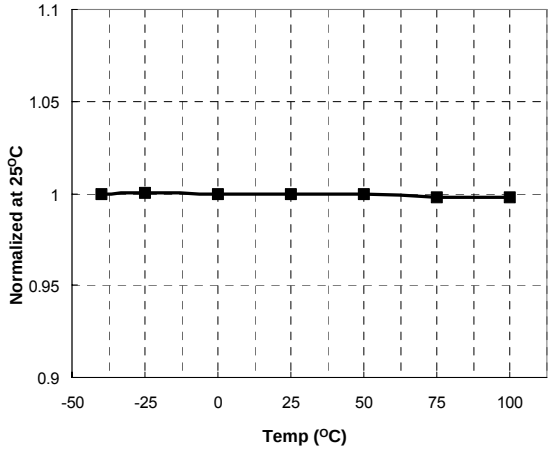

Figure 8. Low-Side V_{CC} (LV_{CC}) Start vs. Temperature

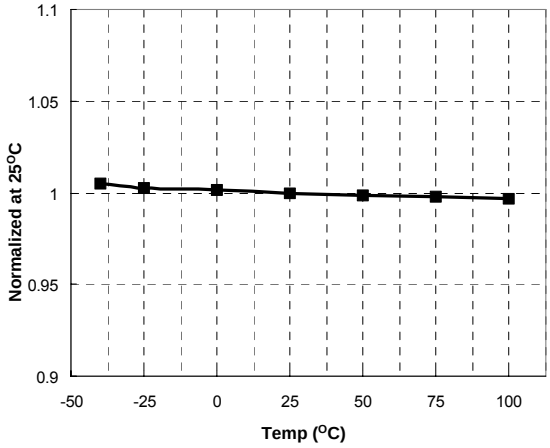

Figure 9. Low-Side V_{CC} (LV_{CC}) Stop vs. Temperature

Typical Performance Characteristics (Continued)

These characteristic graphs are normalized at T_A=25ºC.

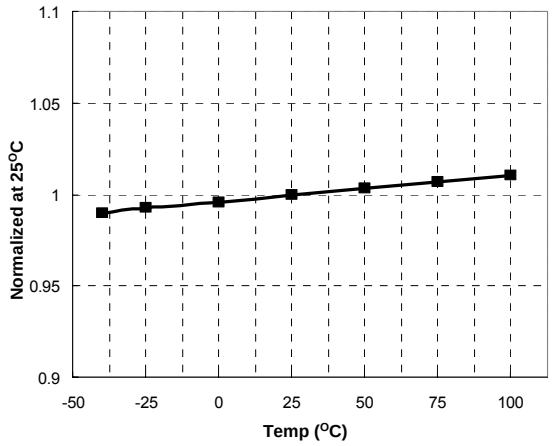

Figure 10. LV_{CC} OVP Voltage vs. Temperature

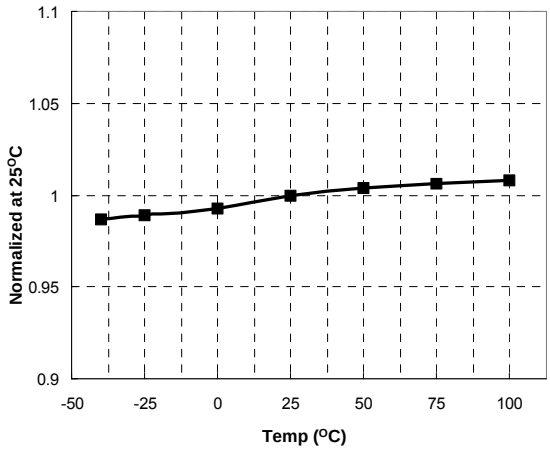

Figure 11. R_T Voltage vs. Temperature

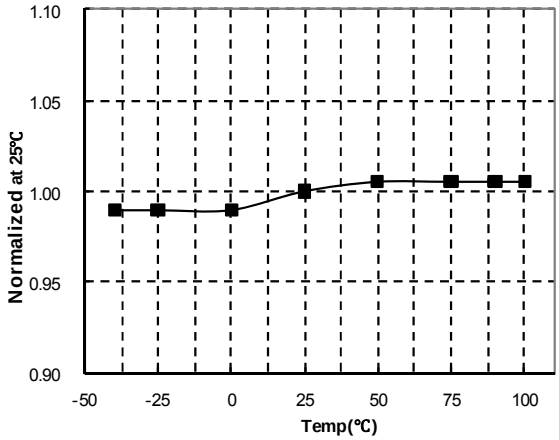

Figure 12. V_{CssL} vs. Temperature

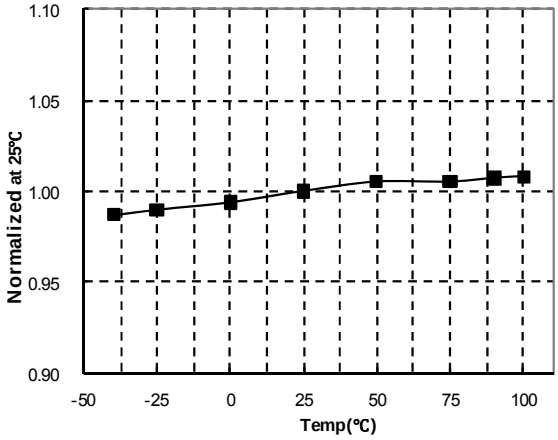

Figure 13. V_{CssH} vs. Temperature

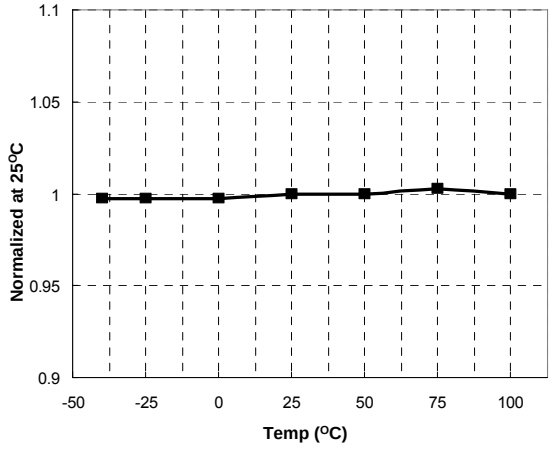

Figure 14. OCP Voltage vs. Temperature

Functional Description

1. Basic Operation: FSFR-US series is designed to drive high-side and low-side MOSFETs complementarily with 50% duty cycle. A fixed dead time of 350ns is introduced between consecutive transitions, as shown in Figure 15.

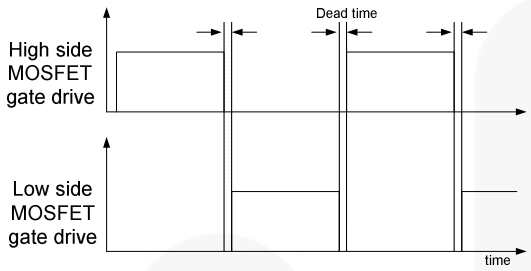

Figure 15. MOSFETs Gate Drive Signal

2. Internal Oscillator: FSFR-US series employs a current-controlled oscillator, as shown in Figure 16. Internally, the voltage of R_T pin is regulated at 2V and the charging / discharging current for the oscillator capacitor, C_T, is obtained by copying the current flowing out of the R_T pin (I_{CTC}) using a current mirror. Therefore, the switching frequency increases as I_{CTC} increases.

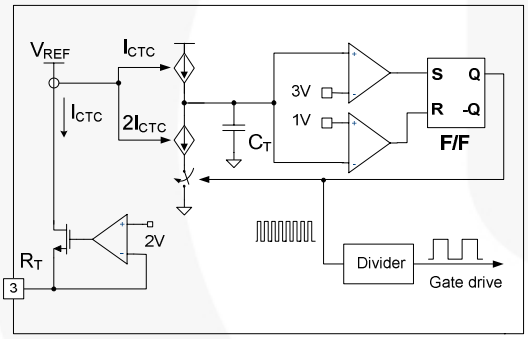

Figure 16. Current Controlled Oscillator

3. Frequency Setting: Figure 17 shows the typical voltage gain curve of a resonant converter, where the gain is inversely proportional to the switching frequency in the ZVS region. The output voltage can be regulated by modulating the switching frequency. Figure 18 shows the typical circuit configuration for the R_T pin, where the opto-coupler transistor is connected to the R_T pin to modulate the switching frequency.

The minimum switching frequency is determined as:

$$f^{\min} = \frac{5.2k\Omega}{R_{\min}} \times 100\,(kHz) \qquad (1)$$

Assuming the saturation voltage of opto-coupler transistor is 0.2V, the maximum switching frequency is determined as:

$$f^{\max} = \left(\frac{5.2k\Omega}{R_{\min}} + \frac{4.68k\Omega}{R_{\max}}\right) \times 100\,(kHz) \qquad (2)$$

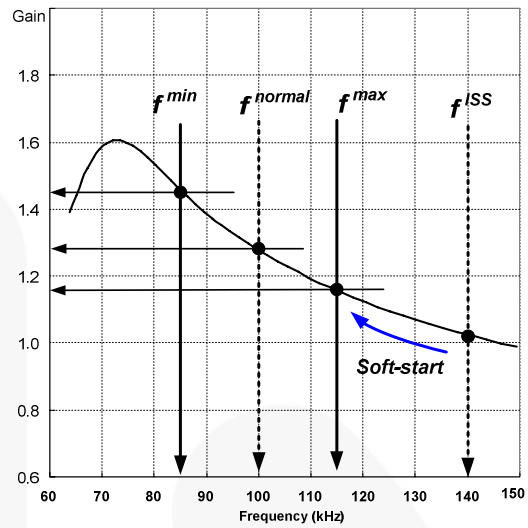

Figure 17. Resonant Converter Typical Gain Curve

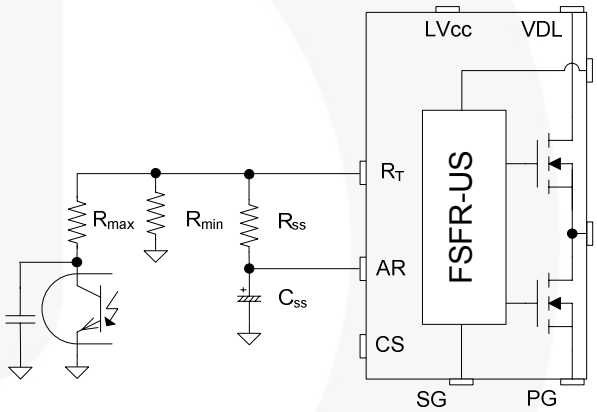

Figure 18. Frequency Control Circuit

To prevent excessive inrush current and overshoot of output voltage during startup, increase the voltage gain of the resonant converter progressively. Since the voltage gain of the resonant converter is inversely proportional to the switching frequency, the soft-start is implemented by sweeping down the switching frequency from an initial high frequency (f^{ISS}) until the output voltage is established. The soft-start circuit is made by connecting R-C series network on the R_T pin, as shown in Figure 18. FSFR-US series also has an internal soft-start for 3ms to reduce the current overshoot during the initial cycles, which adds 40kHz to the initial frequency of the external soft-start circuit, as shown in Figure 19. The initial frequency of the soft-start is given as:

$$f^{ISS} = \left(\frac{5.2k\Omega}{R_{\min}} + \frac{5.2k\Omega}{R_{SS}}\right) \times 100 + 40\ (kHz) \qquad (3)$$

It is typical to set the initial frequency of soft-start two to three times the resonant frequency (f_O) of the resonant network.

The soft-start time is three to four times of the RC time constant. The RC time constant is as follows:

$$\tau = R_{SS} \bullet C_{SS} \quad (4)$$

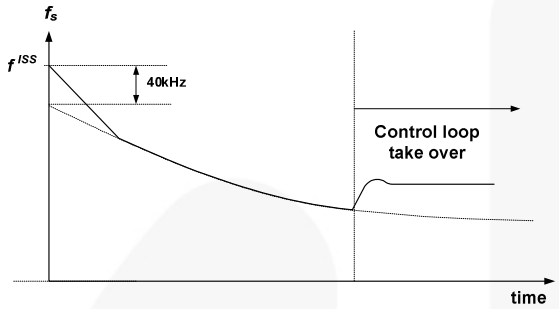

Figure 19. Frequency Sweeping of Soft-Start

4. Self Auto-Restart: The FSFR-US series can restart automatically even though any built-in protections are triggered with external supply voltage. As can be seen in Figure 20 and Figure 21, once any protections are triggered, M1 switch turns on and V-I converter is disabled. C_{SS} starts to be discharged until V_{Css} across C_{SS} drops to V_{CssL}. Then, all protections are reset, M1 turns off, and V-I converter resumes at the same time. The FSFR-US starts switching again with soft-start. If the protections occur while V_{Css} is under V_{CssL} and V_{CssH} level, the switching is terminated immediately, V_{Css} continues to increase until reaching V_{CssH}, then C_{SS} is discharged by M1.

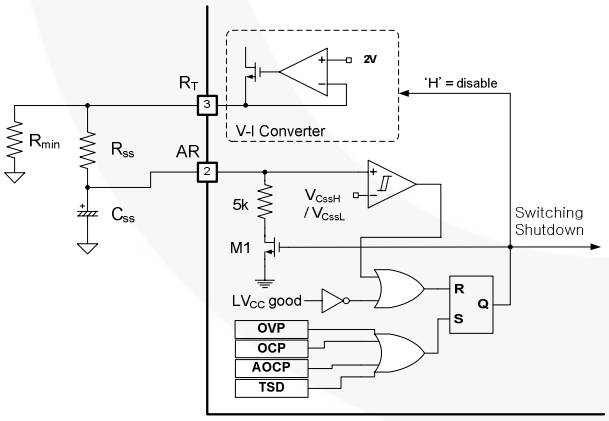

Figure 20. Internal Block of AR Pin

After protections trigger, FSFR-US is disabled during the stop-time, t_{stop}, where V_{Css} decreases and reaches to V_{CssL}. The stop-time of FSFR-US can be estimated as:

$$t_{STOP} = C_{SS} \bullet \{(R_{SS} = R_{MIN}) \| 5k\Omega\} \quad (5)$$

For the soft-start time, $t_{s/s}$ it can be set as Equation (4).

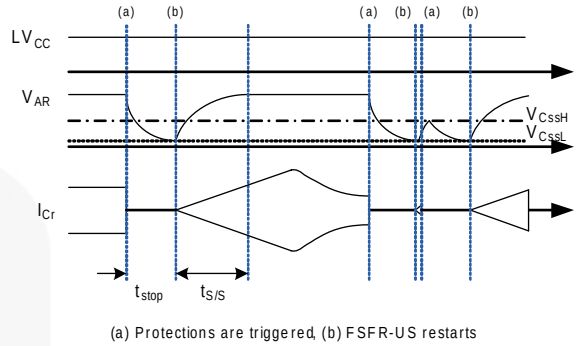

Figure 21. Self Auto-Restart Operation

5. Protection Circuits: The FSFR-US series has several self-protective functions, such as Over-Current Protection (OCP), Abnormal Over-Current Protection (AOCP), Over-Voltage Protection (OVP), and Thermal Shutdown (TSD). These protections are auto-restart mode protections as shown in Figure 22.

Once a fault condition is detected, switching is terminated and the MOSFETs remain off. When LV_{CC} falls to the LV_{CC} stop voltage of 10V or AR signal is HIGH, the protection is reset. The FSFR-US resumes normal operation when LV_{CC} reaches the start voltage of 12.5V.

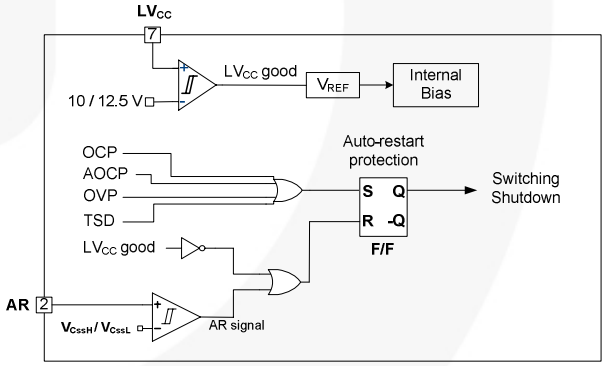

Figure 22. Protection Blocks

5.1 Over-Current Protection (OCP): When the sensing pin voltage drops below -0.58V, OCP is triggered and the MOSFETs remain off. This protection has a shutdown time delay of 1.5µs to prevent premature shutdown during startup.

5.2 Abnormal Over-Current Protection (AOCP): If the secondary rectifier diodes are shorted, large current with extremely high di/dt can flow through the MOSFET before OCP is triggered. AOCP is triggered without shutdown delay when the sensing pin voltage drops below -0.9V.

5.3 Over-Voltage Protection (OVP): When the LV_{CC} reaches 23V, OVP is triggered. This protection is used when auxiliary winding of the transformer to supply V_{CC} to FPS is utilized.

5.4 Thermal Shutdown (TSD): The MOSFETs and the control IC in one package makes it easy for the control IC to detect the abnormal over-temperature of the MOSFETs. If the temperature exceeds approximately 130°C, the thermal shutdown triggers.

6. Current Sensing Using Resistor: FSFR-US series senses drain current as a negative voltage, as shown in Figure 23 and Figure 24. Half-wave sensing allows low power dissipation in the sensing resistor, while full-wave sensing has less switching noise in the sensing signal.

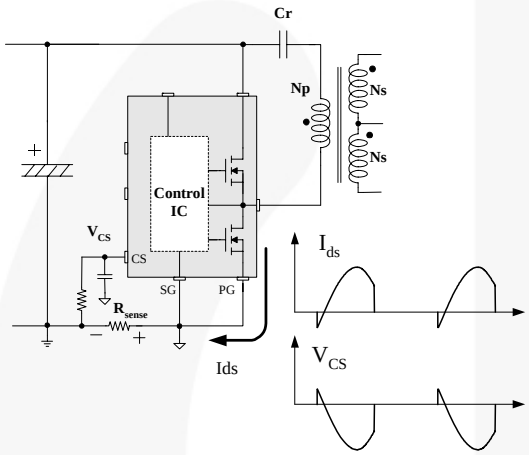

Figure 23. Half-Wave Sensing

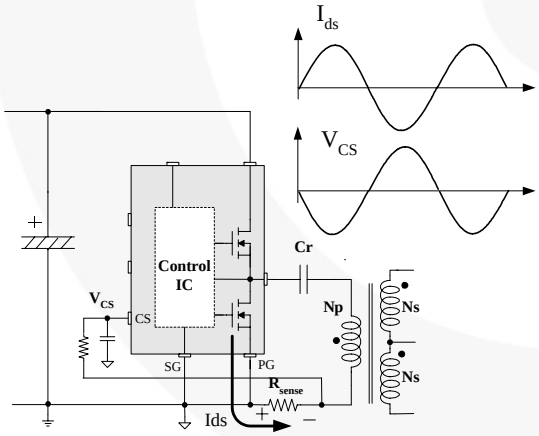

Figure 24. Full-Wave Sensing

7. PCB Layout Guidelines: Duty unbalance problems may occur due to the radiated noise from main transformer, the inequality of the secondary side leakage inductances of main transformer, and so on. Among them, it is one of the dominant reasons that the control components in the vicinity of R_T pin are enclosed by the primary current flows pattern on PCB layout. The direction of the magnetic field on the components caused by the primary current flow is changed when the high-and low-side MOSFET turn on by turns. The magnetic fields with opposite directions induce a current through, into, or out of the R_T pin, which makes the turn-on duration of each MOSFET different. It is strongly recommended to separate the control components in the vicinity of R_T pin from the primary current flow pattern on PCB layout. Figure 25 shows an example for the duty-balanced case.

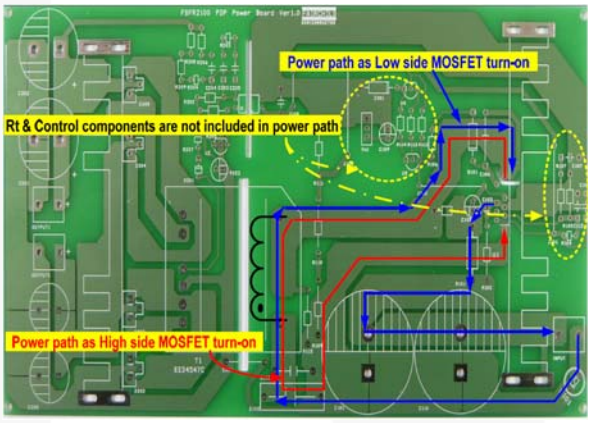

Figure 25. Example for Duty Balancing

Physical Dimensions

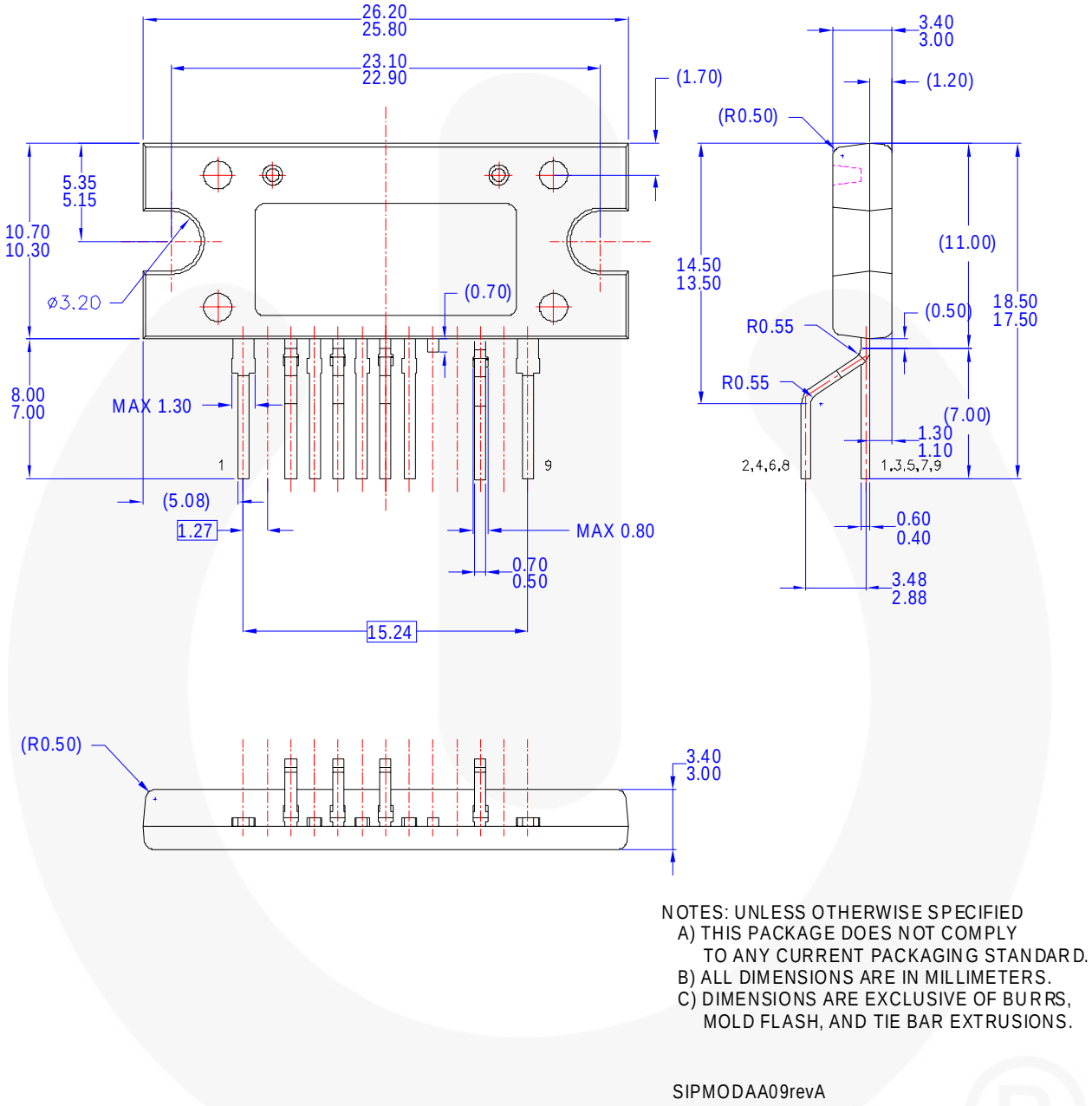

NOTES: UNLESS OTHERWISE SPECIFIED
A) THIS PACKAGE DOES NOT COMPLY TO ANY CURRENT PACKAGING STANDARD.
B) ALL DIMENSIONS ARE IN MILLIMETERS.
C) DIMENSIONS ARE EXCLUSIVE OF BURRS, MOLD FLASH, AND TIE BAR EXTRUSIONS.

SIPMODAA09revA

Figure 26. 9-SIP Package

Package drawings are provided as a service to customers considering Fairchild components. Drawings may change in any manner without notice. Please note the revision and/or date on the drawing and contact a Fairchild Semiconductor representative to verify or obtain the most recent revision. Package specifications do not expand the terms of Fairchild's worldwide terms and conditions, specifically the warranty therein, which covers Fairchild products.

Always visit Fairchild Semiconductor's online packaging area for the most recent package drawings: http://www.fairchildsemi.com/packaging/.

Physical Dimensions

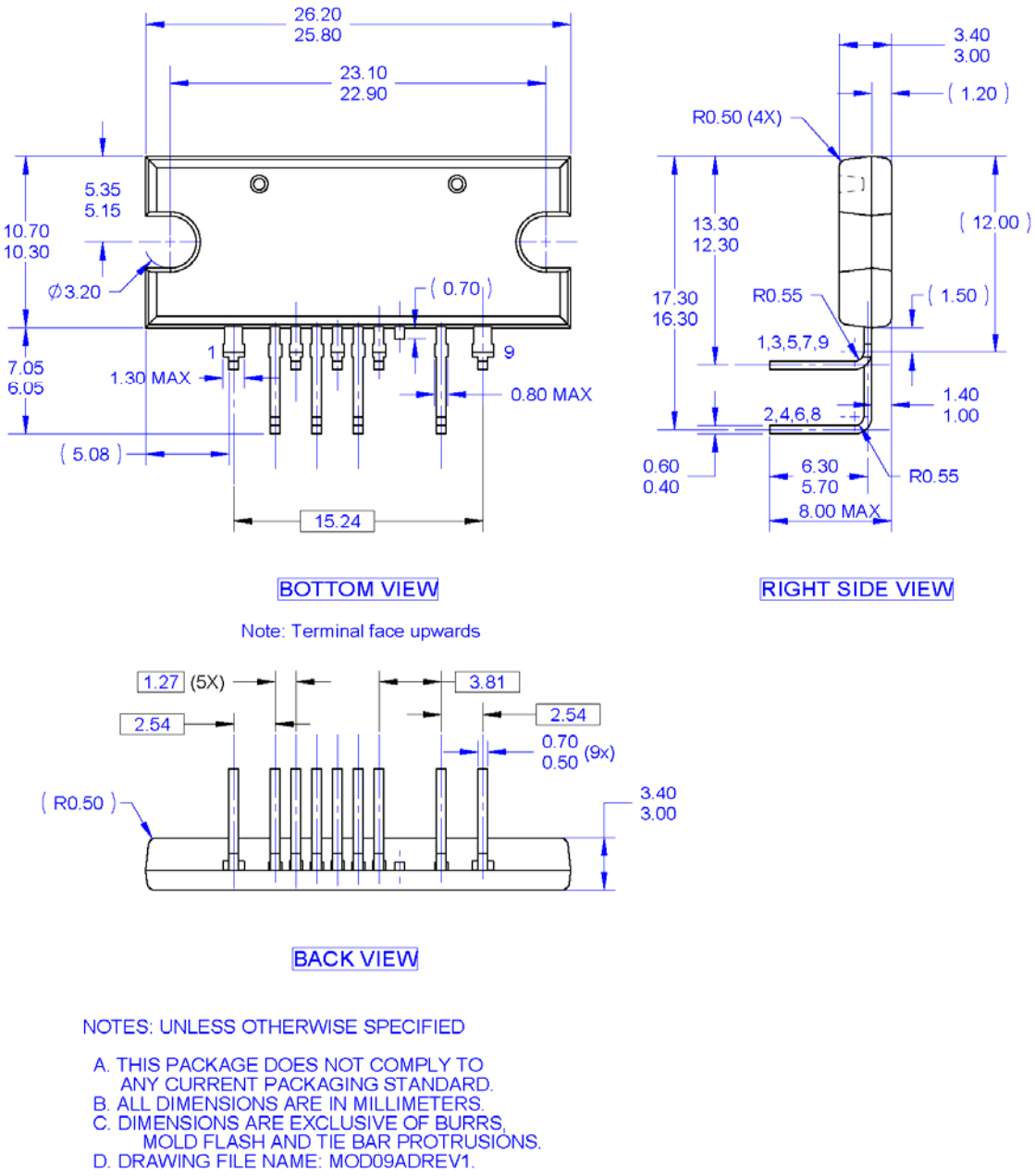

Figure 27. 9-SIP L-Forming Package

Package drawings are provided as a service to customers considering Fairchild components. Drawings may change in any manner without notice. Please note the revision and/or date on the drawing and contact a Fairchild Semiconductor representative to verify or obtain the most recent revision. Package specifications do not expand the terms of Fairchild's worldwide terms and conditions, specifically the warranty therein, which covers Fairchild products.

Always visit Fairchild Semiconductor's online packaging area for the most recent package drawings: http://www.fairchildsemi.com/packaging/.

FAIRCHILD SEMICONDUCTOR®

TRADEMARKS

The following includes registered and unregistered trademarks and service marks, owned by Fairchild Semiconductor and/or its global subsidiaries, and is not intended to be an exhaustive list of all such trademarks.

AccuPower™
Auto-SPM™
Build it Now™
CorePLUS™
CorePOWER™
CROSSVOLT™
CTL™
Current Transfer Logic™
DEUXPEED®
Dual Cool™
EcoSPARK®
EfficientMax™
ESBC™
F®
Fairchild®
Fairchild Semiconductor®
FACT Quiet Series™
FACT®
FAST®
FastvCore™
FETBench™
FlashWriter®*
FPS™
F-PFS™
FRFET®
Global Power Resource℠
Green FPS™
Green FPS™ e-Series™
Gmax™
GTO™
IntelliMAX™
ISOPLANAR™
MegaBuck™
MICROCOUPLER™
MicroFET™
MicroPak™
MicroPak2™
MillerDrive™
MotionMax™
Motion-SPM™
OptoHiT™
OPTOLOGIC®
OPTOPLANAR®
®
PDP SPM™
Power-SPM™
PowerTrench®
PowerXS™
Programmable Active Droop™
QFET®
QS™
Quiet Series™
RapidConfigure™
™
Saving our world, 1mW/W/kW at a time™
SignalWise™
SmartMax™
SMART START™
SPM®
STEALTH™
SuperFET™
SuperSOT™-3
SuperSOT™-6
SuperSOT™-8
SupreMOS®
SyncFET™
Sync-Lock™
SYSTEM GENERAL®*
The Power Franchise®
the power franchise
TinyBoost™
TinyBuck™
TinyCalc™
TinyLogic®
TINYOPTO™
TinyPower™
TinyPWM™
TinyWire™
TriFault Detect™
TRUECURRENT™*
µSerDes™
µSerDes
UHC®
Ultra FRFET™
UniFET™
VCX™
VisualMax™
XS™

* Trademarks of System General Corporation, used under license by Fairchild Semiconductor.

DISCLAIMER

FAIRCHILD SEMICONDUCTOR RESERVES THE RIGHT TO MAKE CHANGES WITHOUT FURTHER NOTICE TO ANY PRODUCTS HEREIN TO IMPROVE RELIABILITY, FUNCTION, OR DESIGN. FAIRCHILD DOES NOT ASSUME ANY LIABILITY ARISING OUT OF THE APPLICATION OR USE OF ANY PRODUCT OR CIRCUIT DESCRIBED HEREIN; NEITHER DOES IT CONVEY ANY LICENSE UNDER ITS PATENT RIGHTS, NOR THE RIGHTS OF OTHERS. THESE SPECIFICATIONS DO NOT EXPAND THE TERMS OF FAIRCHILD'S WORLDWIDE TERMS AND CONDITIONS, SPECIFICALLY THE WARRANTY THEREIN, WHICH COVERS THESE PRODUCTS.

LIFE SUPPORT POLICY

FAIRCHILD'S PRODUCTS ARE NOT AUTHORIZED FOR USE AS CRITICAL COMPONENTS IN LIFE SUPPORT DEVICES OR SYSTEMS WITHOUT THE EXPRESS WRITTEN APPROVAL OF FAIRCHILD SEMICONDUCTOR CORPORATION.

As used herein:

1. Life support devices or systems are devices or systems which, (a) are intended for surgical implant into the body or (b) support or sustain life, and (c) whose failure to perform when properly used in accordance with instructions for use provided in the labeling, can be reasonably expected to result in a significant injury of the user.
2. A critical component in any component of a life support, device, or system whose failure to perform can be reasonably expected to cause the failure of the life support device or system, or to affect its safety or effectiveness.

ANTI-COUNTERFEITING POLICY

Fairchild Semiconductor Corporation's Anti-Counterfeiting Policy. Fairchild's Anti-Counterfeiting Policy is also stated on our external website, www.fairchildsemi.com, under Sales Support.

Counterfeiting of semiconductor parts is a growing problem in the industry. All manufacturers of semiconductor products are experiencing counterfeiting of their parts. Customers who inadvertently purchase counterfeit parts experience many problems such as loss of brand reputation, substandard performance, failed applications, and increased cost of production and manufacturing delays. Fairchild is taking strong measures to protect ourselves and our customers from the proliferation of counterfeit parts. Fairchild strongly encourages customers to purchase Fairchild parts either directly from Fairchild or from Authorized Fairchild Distributors who are listed by country on our web page cited above. Products customers buy either from Fairchild directly or from Authorized Fairchild Distributors are genuine parts, have full traceability, meet Fairchild's quality standards for handling and storage and provide access to Fairchild's full range of up-to-date technical and product information. Fairchild and our Authorized Distributors will stand behind all warranties and will appropriately address any warranty issues that may arise. Fairchild will not provide any warranty coverage or other assistance for parts bought from Unauthorized Sources. Fairchild is committed to combat this global problem and encourage our customers to do their part in stopping this practice by buying direct or from authorized distributors.

PRODUCT STATUS DEFINITIONS

Definition of Terms

Datasheet Identification	Product Status	Definition
Advance Information	Formative / In Design	Datasheet contains the design specifications for product development. Specifications may change in any manner without notice.
Preliminary	First Production	Datasheet contains preliminary data; supplementary data will be published at a later date. Fairchild Semiconductor reserves the right to make changes at any time without notice to improve design.
No Identification Needed	Full Production	Datasheet contains final specifications. Fairchild Semiconductor reserves the right to make changes at any time without notice to improve the design.
Obsolete	Not In Production	Datasheet contains specifications on a product that is discontinued by Fairchild Semiconductor. The datasheet is for reference information only.

Rev. I49

ON Semiconductor and ON are trademarks of Semiconductor Components Industries, LLC dba ON Semiconductor or its subsidiaries in the United States and/or other countries. ON Semiconductor owns the rights to a number of patents, trademarks, copyrights, trade secrets, and other intellectual property. A listing of ON Semiconductor's product/patent coverage may be accessed at www.onsemi.com/site/pdf/Patent−Marking.pdf. ON Semiconductor reserves the right to make changes without further notice to any products herein. ON Semiconductor makes no warranty, representation or guarantee regarding the suitability of its products for any particular purpose, nor does ON Semiconductor assume any liability arising out of the application or use of any product or circuit, and specifically disclaims any and all liability, including without limitation special, consequential or incidental damages. Buyer is responsible for its products and applications using ON Semiconductor products, including compliance with all laws, regulations and safety requirements or standards, regardless of any support or applications information provided by ON Semiconductor. "Typical" parameters which may be provided in ON Semiconductor data sheets and/or specifications can and do vary in different applications and actual performance may vary over time. All operating parameters, including "Typicals" must be validated for each customer application by customer's technical experts. ON Semiconductor does not convey any license under its patent rights nor the rights of others. ON Semiconductor products are not designed, intended, or authorized for use as a critical component in life support systems or any FDA Class 3 medical devices or medical devices with a same or similar classification in a foreign jurisdiction or any devices intended for implantation in the human body. Should Buyer purchase or use ON Semiconductor products for any such unintended or unauthorized application, Buyer shall indemnify and hold ON Semiconductor and its officers, employees, subsidiaries, affiliates, and distributors harmless against all claims, costs, damages, and expenses, and reasonable attorney fees arising out of, directly or indirectly, any claim of personal injury or death associated with such unintended or unauthorized use, even if such claim alleges that ON Semiconductor was negligent regarding the design or manufacture of the part. ON Semiconductor is an Equal Opportunity/Affirmative Action Employer. This literature is subject to all applicable copyright laws and is not for resale in any manner.

PUBLICATION ORDERING INFORMATION

LITERATURE FULFILLMENT:
Literature Distribution Center for ON Semiconductor
19521 E. 32nd Pkwy, Aurora, Colorado 80011 USA
Phone: 303−675−2175 or 800−344−3860 Toll Free USA/Canada
Fax: 303−675−2176 or 800−344−3867 Toll Free USA/Canada
Email: orderlit@onsemi.com

N. American Technical Support: 800−282−9855 Toll Free USA/Canada
Europe, Middle East and Africa Technical Support:
Phone: 421 33 790 2910
Japan Customer Focus Center
Phone: 81−3−5817−1050

ON Semiconductor Website: **www.onsemi.com**

Order Literature: http://www.onsemi.com/orderlit

For additional information, please contact your local Sales Representative